Steve Miller
Mayor

Mark Scharringhausen
Council Member at Large

Chad Oberson
Council Member at Large

Bill Woeste
Council Member at Large

Leslie Besl
Council Member, 1st Ward

Dale Paullus
Councilmember, 2nd Ward

Terry Senger
Councilmember, 3rd Ward

Tim Abbott
Council Member, 4th Ward

CITY OF FAIRFIELD CITY COUNCIL
REGULAR MEETING AGENDA
MONDAY, SEPTEMBER 28, 2020 7:00 PM
5350 PLEASANT AVENUE, FAIRFIELD, OH 45014

Guidelines for Citizen Comments: Thank you for your interest and participation in city government. Fairfield City Council's Guidelines for Citizen Comments describe the rules for addressing City Council. The guidelines are posted in the Council Chambers.

ADA Notice: The City of Fairfield is pleased to provide accommodations to disabled individuals or groups and encourage full participation in city government. Should special accommodations be required, please contact the Clerk of Council at 867-5383 at least 48 hours in advance of the meeting.

1. COUNCIL-MANAGER BRIEFING

A. 6:00 PM - Redevelopment Strategy

2. BUSINESS MEETING CALL TO ORDER

3. PRAYER/PLEDGE OF ALLEGIANCE

4. ROLL CALL

5. AGENDA MODIFICATIONS

6. EXECUTIVE SESSION REQUESTS

7. SPECIAL PRESENTATIONS AND CITIZEN COMMENTS

a. Elderly Services Program Update - Jennifer Roth, Butler County Advisory Council for Elderly Services

8. PUBLIC HEARING(S)

9. APPROVAL OF MINUTES

a. Regular Meeting held September 14, 2020

10. OLD BUSINESS AND REPORTS

A. <u>COMMUNITY & PUBLIC RELATIONS COMMITTEE</u>

Dale Paullus, Chair; Leslie Besl, Vice Chair; Terry Senger, Member

B. <u>DEVELOPMENT SERVICES COMMITTEE</u>

Bill Woeste, Chair; Tim Abbott, Vice Chair; Mark Scharringhausen, Member

1. Ordinance to amend Section 1113.01 of Ordinance No. 166-84, the Codified Ordinances of Fairfield, Ohio, to adopt an amended Design, Construction and Materials Specification Handbook, 2020 Sixth Edition.

   - Motion - Amend per attached clarification memo
   - Legislation - Third Reading
   - Motion - Adoption

C. <u>PARKS, RECREATION AND ENVIRONMENT COMMITTEE</u>

Leslie Besl, Chair; Dale Paullus, Vice Chair; Tim Abbott, Member

D. <u>PUBLIC SAFETY COMMITTEE</u>

Mark Scharringhausen, Chair; Terry Senger, Vice Chair; Dale Paullus, Member

E. <u>PUBLIC WORKS COMMITTEE</u>

Chad Oberson, Chair; Mark Scharringhausen, Vice Chair; Bill Woeste, Member

1. Ordinance to authorize the release of the maintenance bond and accept the public improvements for the Palomino Estates Subdivision.

   - Legislation - Third Reading
   - Motion - Adoption

F. <u>PUBLIC UTILITIES COMMITTEE</u>

Terry Senger, Chair; Chad Oberson, Vice Chair; Leslie Besl, Member

G. <u>FINANCE & BUDGET COMMITTEE</u>

Tim Abbott, Chair; Bill Woeste, Vice Chair; Chad Oberson, Member

11. NEW BUSINESS

A. <u>DEVELOPMENT SERVICES COMMITTEE</u>

Bill Woeste, Chair; Tim Abbott, Vice Chair; Mark Scharringhausen, Member

1. Ordinance to authorize the City Manager to execute the FY 2021 Community Development Block Grant (CDBG) application and agreement with Butler County, Ohio.

   - Motion - Read by Title Only (Optional)
   - Legislation - First Reading

B. <u>PUBLIC SAFETY COMMITTEE</u>

Mark Scharringhausen, Chair; Terry Senger, Vice Chair; Dale Paullus, Member

1. Ordinance to authorize the City Manager to execute an agreement for indigent legal representation for 2021 in the Fairfield Municipal Court with the Butler County Public Defender Commission/Butler County Board of Commissioners.

   - Motion - Read by Title Only (Optional)
   - Legislation - First Reading
   - Motion - Suspend Second and Third Readings
   - Motion - Adoption

C. PUBLIC WORKS COMMITTEE

Chad Oberson, Chair; Mark Scharringhausen, Vice Chair; Bill Woeste, Member

1. Ordinance to approve and adopt the Fairfield Connects-Citywide Active Transportation Plan as part of the City of Fairfield, Ohio Comprehensive Plan.

   - Motion - Read by Title Only (Optional)
   - Legislation - First Reading

2. Ordinance to authorize the City Manager to execute an Ohio Public Works Commission (OPWC) Issue 1 - Grant Application and Agreement for 2022 Street Improvement Program and declaring an emergency.

   - Motion - Read by Title Only (Optional)
   - Legislation - First Reading
   - Motion - Suspend Second and Third Readings
   - Motion - Adoption

D. PUBLIC UTILITIES COMMITTEE

Terry Senger, Chair; Chad Oberson, Vice Chair; Leslie Besl, Member

1. Ordinance to amend subsection 921.03(g), Expansion and Water Tap Fees, section 921.08, Water Rates, and subsections 925.05(e)(2) Sewer Expansion Fees and 925.08(b)(1) Sewer User Rates of Ordinance No. 166-84, the Codified Ordinances of Fairfield, Ohio.

   - Motion - Read by Title Only (Optional)
   - Legislation - First Reading

E. FINANCE & BUDGET COMMITTEE

Tim Abbott, Chair; Bill Woeste, Vice Chair; Chad Oberson, Member

1. Ordinance providing for the issuance of $85,704.63 of bonds by the City of Fairfield, Ohio, to pay part of the cost of sidewalk repair in the City, and declaring an emergency.

   - Motion - Read by Title Only (Optional)
   - Legislation - First Reading
   - Motion - Suspend Second and Third Readings
   - Motion - Adoption

2. Ordinance to amend Ordinance No. 119-19 entitled "An Ordinance to make estimated appropriations for the expenses and other expenditures of the City of Fairfield, Ohio, during a period beginning January 1, 2020, and ending December 31, 2020."
   Contractual Appropriations: $25,000 for concrete improvements at Seward Road Water Storage Tower site (existing contract); $55,000 for Parks and Recreation Software Upgrade (existing contract).

   - Motion - Read by Title Only (Optional)
   - Legislation - First Reading
   - Motion - Suspend Second and Third Readings
   - Motion - Adoption

3. Ordinance to amend Ordinance No. 119-19 entitled "An Ordinance to make estimated appropriations for the expenses and other expenditures of the City of Fairfield, Ohio, during a period beginning January 1, 2020, and ending December 31, 2020."
   Non-Contractual Appropriations: $7,000 for asphalt repairs; $28,360 for engineering services for water main replacement project; $30,800 for software integration services; $2,084 for security camera at Wastewater Plant.

   - Motion - Read by Title Only (Optional)
   - Legislation - First Reading
   - Motion - Suspend Second and Third Readings
   - Motion - Adoption

12. MEETING SCHEDULE

A. Tuesday, October 13th - Council-Manager Briefing, 6:00 PM; Regular Meeting 7:00 PM

B. Monday, October 26th - Council-Manager Briefing, 6:00 PM; Regular Meeting 7:00 PM

C. Monday, November 9th - Council-Manager Briefing, 6:00 PM; Regular Meeting 7:00 PM

13. EXECUTIVE SESSION OF COUNCIL (IF NEEDED)

14. ADJOURNMENT

City of Fairfield
Minutes
Regular Meeting of City Council
September 14, 2020

Minutes Acceptance: Minutes of Sep 14, 2020 7:00 PM (Approval of Minutes)

Council-Manager Briefing

Water and Sewer Rate Study Review

Mayor Miller called the briefing to order at 6:00 PM. Councilmembers present: Leslie Besl, Terry Senger, Tim Abbott, Mark Scharringhausen, Chad Oberson and Bill Woeste.

Staff members present: Mark Wendling, Dan Wendt, Adam Sackenheim, Scott Timmer, Steve Wolterman, Ben Mann, Tiphanie Howard, Steve Maynard, Tom Wagner, Jason Hunold, Matt Young and Alisha Wilson.

Public Utilities Director Adam Sackenheim presented the water and sewer rate study. See attached slides.

Business Meeting Call to Order

Mayor Miller called the Regular Meeting to order at 7:00 PM.

Prayer/Pledge of Allegiance

Councilmember Abbott led in prayer and Pledge of Allegiance.

Roll Call

Councilmembers present included:

Attendee Name	Title	Status	Arrived
Mark Scharringhausen	Council Member at Large	Present	
Chad Oberson	Council Member at Large	Present	
Bill Woeste	Council Member at Large	Present	
Leslie Besl	Council Member, 1st Ward	Present	
Dale Paullus	Councilmember, 2nd Ward	Excused	
Terry Senger	Councilmember, 3rd Ward	Present	
Tim Abbott	Council Member, 4th Ward	Present	
Steve Miller	Mayor	Present	

Councilmember Abbott, seconded by Councilmember Woeste, moved to excuse Councilmember Paullus. Motion carried 6-0.

Agenda Modifications

None.

Executive Session Requests

Councilmember Abbott, seconded by Councilmember Woeste, moved for executive session to discuss the status of negotations with public employees. Motion carried 6-0.

Special Presentations and Citizen Comments

Hugh Thompson, 5777 Windermere Lane - Mr. Thompson commended the energy agreement that was passed at the previous meeting and encouraged expansion on those efforts.

George Wilson, 151 Twin Lakes Drive - in light of recent events around the world, Mr. Wilson wanted to remind council of the time he felt he was racially profiled by a Fairfield police officer and offer his services for diversity training in the department. Chief Maynard responded to Councilmember Senger's request for a response that he stays in touch with Mr. Wilson regularly and has a good relationship with him. He respectfully feels that there are 2 different perspectives to the situation, but stated that the video was reviewed and the situation was investigated. He stated that there would have been some discipline action against the officer if he felt it was necessary.

Public Hearing(s)

None.

Approval of Minutes

The Regular Meeting Minutes of August 24, 2020 were approved as written and submitted.

OLD BUSINESS AND REPORTS

Community & Public Relations Committee

Dale Paullus, Chair; Leslie Besl, Vice Chair; Terry Senger, Member

Development Services Committee

Bill Woeste, Chair; Tim Abbott, Vice Chair; Mark Scharringhausen, Member

Ordinance to amend Section 1113.01 of Ordinance No. 166-84, the Codified Ordinances of Fairfield, Ohio, to adopt an amended Design, Construction and Materials Specification Handbook, 2020 Sixth Edition.

Recommendation:
It is recommended that Council hold a first reading on August 10, schedule a joint public hearing with Planning Commission for August 24, and await a written recommendation from Planning Commission.

Councilmember Woeste presented the second reading of this ordinance.

RESULT:	**SECOND READING**	**Next: 9/28/2020 7:00 PM**

Parks, Recreation and Environment Committee

Leslie Besl, Chair; Dale Paullus, Vice Chair; Tim Abbott, Member

Public Safety Committee

Mark Scharringhausen, Chair; Terry Senger, Vice Chair; Dale Paullus, Member

Public Works Committee

Chad Oberson, Chair; Mark Scharringhausen, Vice Chair; Bill Woeste, Member

Ordinance to authorize the release of the maintenance bond and accept the public improvements for the Palomino Estates Subdivision.

Recommendation:
It is recommended that City Council authorize and direct preparation of legislation accepting these public improvements.

Councilmember Oberson presented the second reading of this ordinance.

RESULT:	**SECOND READING**	**Next: 9/28/2020 7:00 PM**

Public Utilities Committee

Terry Senger, Chair; Chad Oberson, Vice Chair; Leslie Besl, Member

Finance & Budget Committee

Tim Abbott, Chair; Bill Woeste, Vice Chair; Chad Oberson, Member

NEW BUSINESS

Public Works Committee

Chad Oberson, Chair; Mark Scharringhausen, Vice Chair; Bill Woeste, Member

Motion to Read by Title Only

Motion to read two ordinances by title only.

RESULT:	**CARRIED [UNANIMOUS]**
MOVER:	Chad Oberson, Council Member at Large
SECONDER:	Terry Senger, Councilmember, 3rd Ward
AYES:	Scharringhausen, Oberson, Woeste, Besl, Senger, Abbott
EXCUSED:	Paullus

Ordinance to authorize the City Manager to execute the Electric Vehicle Charging Station Grant Application and Agreement with the Ohio Environmental Protection Agency (OEPA) for the Fairfield Community Arts Center and declaring an emergency.

Recommendation:
It is recommended that City Council authorize the preparation of legislation, with rules suspension and

emergency provision, authorizing the City Manager to execute and file the application for financial assistance, and enter into an agreement for a grant to fund the majority portion of the Electric Vehicle (EV) Charging Station Grant Application through the Ohio Environmental Protection Agency (OEPA) for the Fairfield Community Arts Center.

Staff believes the grant has merit and that the installation will help keep the City in touch with developing technologies. The addition of EV charging have the potential to provide support to our local businesses.

ORDINANCE NO. 72-20. APPROVED 5-1.

RESULT:	**ADOPTED [5 TO 1]**
MOVER:	Chad Oberson, Council Member at Large
SECONDER:	Leslie Besl, Council Member, 1st Ward
AYES:	Scharringhausen, Oberson, Woeste, Besl, Abbott
NAYS:	Senger
EXCUSED:	Paullus

Motion to Suspend Second and Third Readings

Councilmember Oberson presented the first reading of this ordinance.

Councilmember Senger commented that he is voting against this ordinance because of the location. He does not feel that Village Green is the appropriate location given all the restrictions on homeowners in that area.

Councilmember Oberson commented that he is in favor of the charging stations and that he understands that electric vehicle owners are willing to sacrifice and walk to stores while their car charges. Village Green will allow them places to spend time while they wait.

Councilmember Abbott commented that the technology is coming, whether anyone likes it or not, and it's better to be on the forefront.

Mayor Miller commented that he feels electric vehicles will be the only vehicles available to purchase in the next 10 years and that we should be ahead of the game, not scrambling to catch up. He would like to see the city work with some community partners to get charging stations in multiple locations throughout the city.

RESULT:	**CARRIED [UNANIMOUS]**
MOVER:	Chad Oberson, Council Member at Large
SECONDER:	Bill Woeste, Council Member at Large
AYES:	Scharringhausen, Oberson, Woeste, Besl, Senger, Abbott
EXCUSED:	Paullus

Ordinance to authorize the City Manager to execute and file the application for financial assistance and enter into an agreement with ODOT for a grant to fund a major portion of the Route 4/Seward Road Improvement Project and declaring an emergency.

Recommendation:

It is recommended that City Council authorize the preparation of legislation, with rules suspension and emergency provision, authorizing the City Manager to execute and file the application for financial assistance, and (if successful) enter into an agreement with ODOT for a grant to fund a major portion of the Route 4/Seward Road Improvement Project.

ORDINANCE NO. 73-20. APPROVED 6-0.

RESULT:	**ADOPTED [UNANIMOUS]**
MOVER:	Chad Oberson, Council Member at Large
SECONDER:	Tim Abbott, Council Member, 4th Ward
AYES:	Scharringhausen, Oberson, Woeste, Besl, Senger, Abbott
EXCUSED:	Paullus

Motion to Suspend Second and Third Readings

Councilmember Oberson presented the first reading of this ordinance.

RESULT:	**CARRIED [UNANIMOUS]**
MOVER:	Chad Oberson, Council Member at Large
SECONDER:	Bill Woeste, Council Member at Large
AYES:	Scharringhausen, Oberson, Woeste, Besl, Senger, Abbott
EXCUSED:	Paullus

Public Utilities Committee

Terry Senger, Chair; Chad Oberson, Vice Chair; Leslie Besl, Member

Motion to Read by Title Only

Motion to read one ordinance by title only.

RESULT:	**CARRIED [UNANIMOUS]**
MOVER:	Terry Senger, Councilmember, 3rd Ward
SECONDER:	Tim Abbott, Council Member, 4th Ward
AYES:	Scharringhausen, Oberson, Woeste, Besl, Senger, Abbott
EXCUSED:	Paullus

Motion to Suspend Second and Third Readings

Councilmember Senger presented the first reading of this ordinance.

RESULT:	**CARRIED [UNANIMOUS]**
MOVER:	Terry Senger, Councilmember, 3rd Ward
SECONDER:	Bill Woeste, Council Member at Large
AYES:	Scharringhausen, Oberson, Woeste, Besl, Senger, Abbott
EXCUSED:	Paullus

Ordinance to authorize the City Manager to enter into a contract with Ferguson Waterworks for water meters and an automated meter reading system, and declaring an emergency.

Recommendation:
It is recommended that City Council authorize the City Manager to enter into a contract with Ferguson Waterworks and appropriate funding in the amount of $250,000.00 for the procurement of water meters and an advanced automated meter reading system. Rules suspension is requested in order to expedite the project.

ORDINANCE NO. 74-20. APPROVED 6-0.

RESULT:	**ADOPTED [UNANIMOUS]**
MOVER:	Terry Senger, Councilmember, 3rd Ward
SECONDER:	Tim Abbott, Council Member, 4th Ward
AYES:	Scharringhausen, Oberson, Woeste, Besl, Senger, Abbott
EXCUSED:	Paullus

Finance & Budget Committee

Tim Abbott, Chair; Bill Woeste, Vice Chair; Chad Oberson, Member

Motion to Read by Title Only

Motion to read one resolution and two ordinances by title only.

RESULT:	**CARRIED [UNANIMOUS]**
MOVER:	Tim Abbott, Council Member, 4th Ward
SECONDER:	Bill Woeste, Council Member at Large
AYES:	Scharringhausen, Oberson, Woeste, Besl, Senger, Abbott
EXCUSED:	Paullus

Resolution Accepting the Amounts and Rates as Determined by the Budget Commission and authorizing the necessary tax levies and certifying them to the County Auditor.

Recommendation:
The resolution would authorize the necessary tax levies to be collected for tax year 2020 collected during budget year 2021 to the Butler County Auditor.

RESOLUTION NO. 12-20. APPROVED 6-0.

RESULT:	**ADOPTED [UNANIMOUS]**
MOVER:	Tim Abbott, Council Member, 4th Ward
SECONDER:	Bill Woeste, Council Member at Large
AYES:	Scharringhausen, Oberson, Woeste, Besl, Senger, Abbott
EXCUSED:	Paullus

Motion to Suspend Second and Third Readings

Councilmember Abbott presented the first reading of this resolution.

RESULT:	**CARRIED [UNANIMOUS]**
MOVER:	Tim Abbott, Council Member, 4th Ward
SECONDER:	Bill Woeste, Council Member at Large
AYES:	Scharringhausen, Oberson, Woeste, Besl, Senger, Abbott
EXCUSED:	Paullus

Ordinance to amend Ordinance No. 119-19 entitled "An Ordinance to make estimated appropriations for the expenses and other expenditures of the City of Fairfield, Ohio, during a period beginning January 1, 2020, and ending December 31, 2020."

Recommendation:
It is recommended that City Council suspend the rules requiring a second and third reading of this Ordinance and adopt the appropriations listed above.

Minutes Acceptance: Minutes of Sep 14, 2020 7:00 PM (Approval of Minutes)

ORDINANCE NO. 75-20. APPROVED 6-0.

RESULT:	**ADOPTED [UNANIMOUS]**
MOVER:	Tim Abbott, Council Member, 4th Ward
SECONDER:	Bill Woeste, Council Member at Large
AYES:	Scharringhausen, Oberson, Woeste, Besl, Senger, Abbott
EXCUSED:	Paullus

Motion to Suspend Second and Third Readings

Councilmember Abbott presented the first reading of this ordinance.

RESULT:	**CARRIED [UNANIMOUS]**
MOVER:	Tim Abbott, Council Member, 4th Ward
SECONDER:	Bill Woeste, Council Member at Large
AYES:	Scharringhausen, Oberson, Woeste, Besl, Senger, Abbott
EXCUSED:	Paullus

Ordinance to amend Ordinance No. 119-19 entitled "An Ordinance to make estimated appropriations for the expenses and other expenditures of the City of Fairfield, Ohio, during a period beginning January 1, 2020, and ending December 31, 2020."

Recommendation:
It is recommended that City Council suspend the rules requiring a second and third reading of this Ordinance and adopt the appropriations listed above.

ORDINANCE NO. 76-20. APPROVED 6-0.

RESULT:	**ADOPTED [UNANIMOUS]**
MOVER:	Tim Abbott, Council Member, 4th Ward
SECONDER:	Chad Oberson, Council Member at Large
AYES:	Scharringhausen, Oberson, Woeste, Besl, Senger, Abbott
EXCUSED:	Paullus

Motion to Suspend Second and Third Readings

Councilmember Abbott presented the first reading of this ordinance.

RESULT:	**CARRIED [UNANIMOUS]**
MOVER:	Tim Abbott, Council Member, 4th Ward
SECONDER:	Bill Woeste, Council Member at Large
AYES:	Scharringhausen, Oberson, Woeste, Besl, Senger, Abbott
EXCUSED:	Paullus

Meeting Schedule

Clerk Wilson read the following meeting schedule:

A. Monday, September 28 - Council-Manager Briefing, 6:00 PM; Regular Meeting 7:00 PM

B. Tuesday, October 13 - Council-Manager Briefing, 6:00 PM; Regular Meeting 7:00 PM

C. Monday, October 26 - Council-Manager Briefing, 6:00 PM; Regular Meeting 7:00 PM

Executive Session of Council (if needed)

Council recessed to Executive Session at 7:35 PM.

14. ADJOURNMENT

The Regular Meeting adjourned at 8:10 PM.

ATTEST:

_____

Clerk of Council

_____

Mayor's Approval

Date Approved_____

FAIRFIELD
PUBLIC UTILITIES

Stantec

FY 2020 Water and Sewer Utility Rate and Fee Study

Results and Recommendations

September 14, 2020

Rate Study Overview

1. Background
2. Financial Plan Results
3. Expansion Fee Analysis Results
4. Rate & Fee Evaluation & Recommendation

Minutes Acceptance: Minutes of Sep 14, 2020 7:00 PM (Approval of Minutes)

Background

Rate History

- No water rate increases 1985-2007
- 2007-2016 4.3% increase/year (combined)
- Significant increases 2017-2020
  - 2017 +9.7%
  - 2018 +9.9%
  - 2019 +5.2%
  - 2020 +4.9%

Why did we need these increases?
What did we do with the revenue?

Minutes Acceptance: Minutes of Sep 14, 2020 7:00 PM (Approval of Minutes)

Background

Stretching our Dollar…

- Operational considerations:
  - Staffing
  - Restructuring
  - Technology
  - Automation
  - Metering

Minutes Acceptance: Minutes of Sep 14, 2020 7:00 PM (Approval of Minutes)

Background

Rate Survey

Where are we now?
And what else do we need to do?

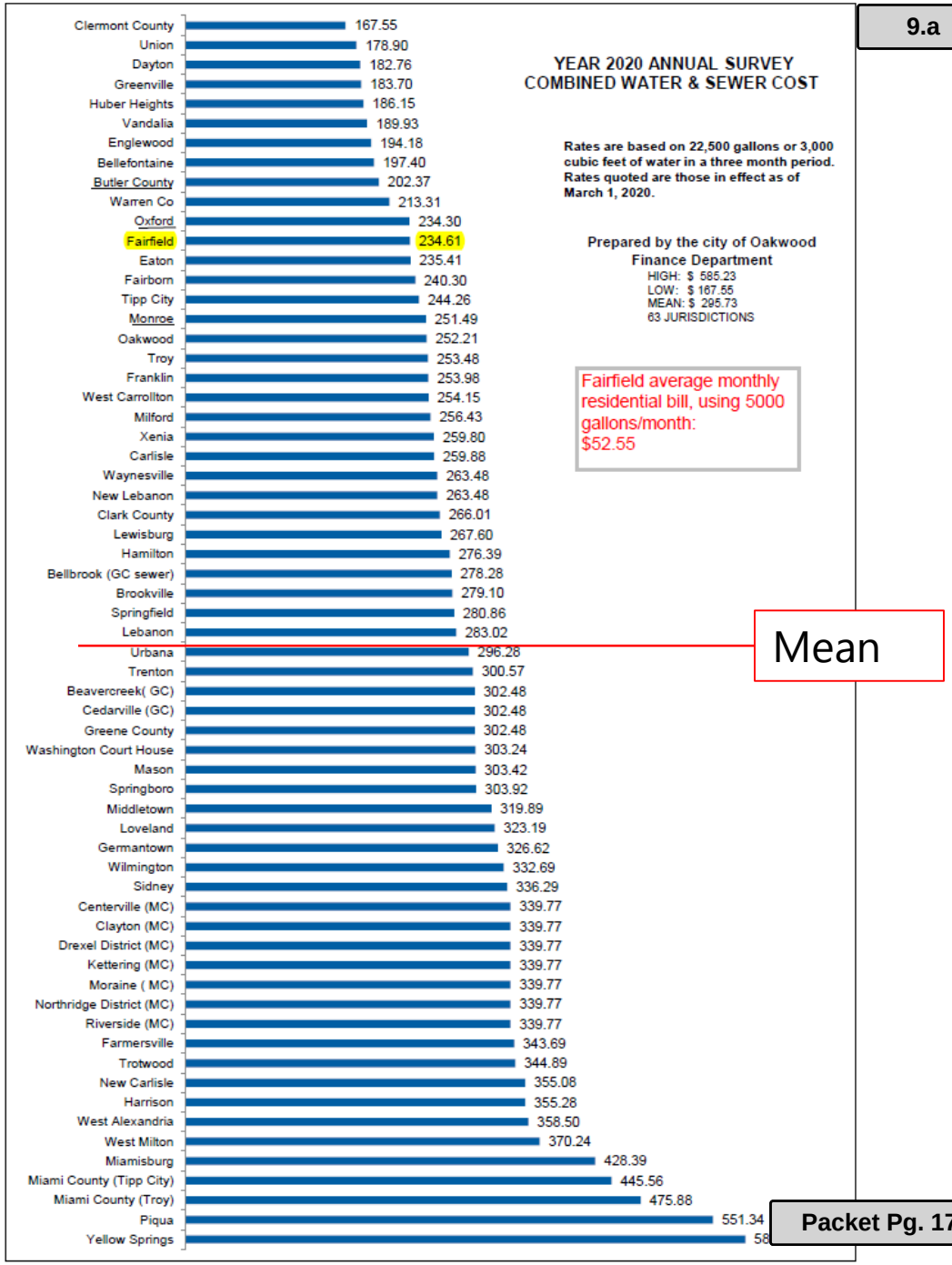

Minutes Acceptance: Minutes of Sep 14, 2020 7:00 PM (Approval of Minutes)

Financial Plan

Building Blocks of Financial Plan

The financial plan projects level of revenues required to meet costs (i.e., revenue requirement) for services provided

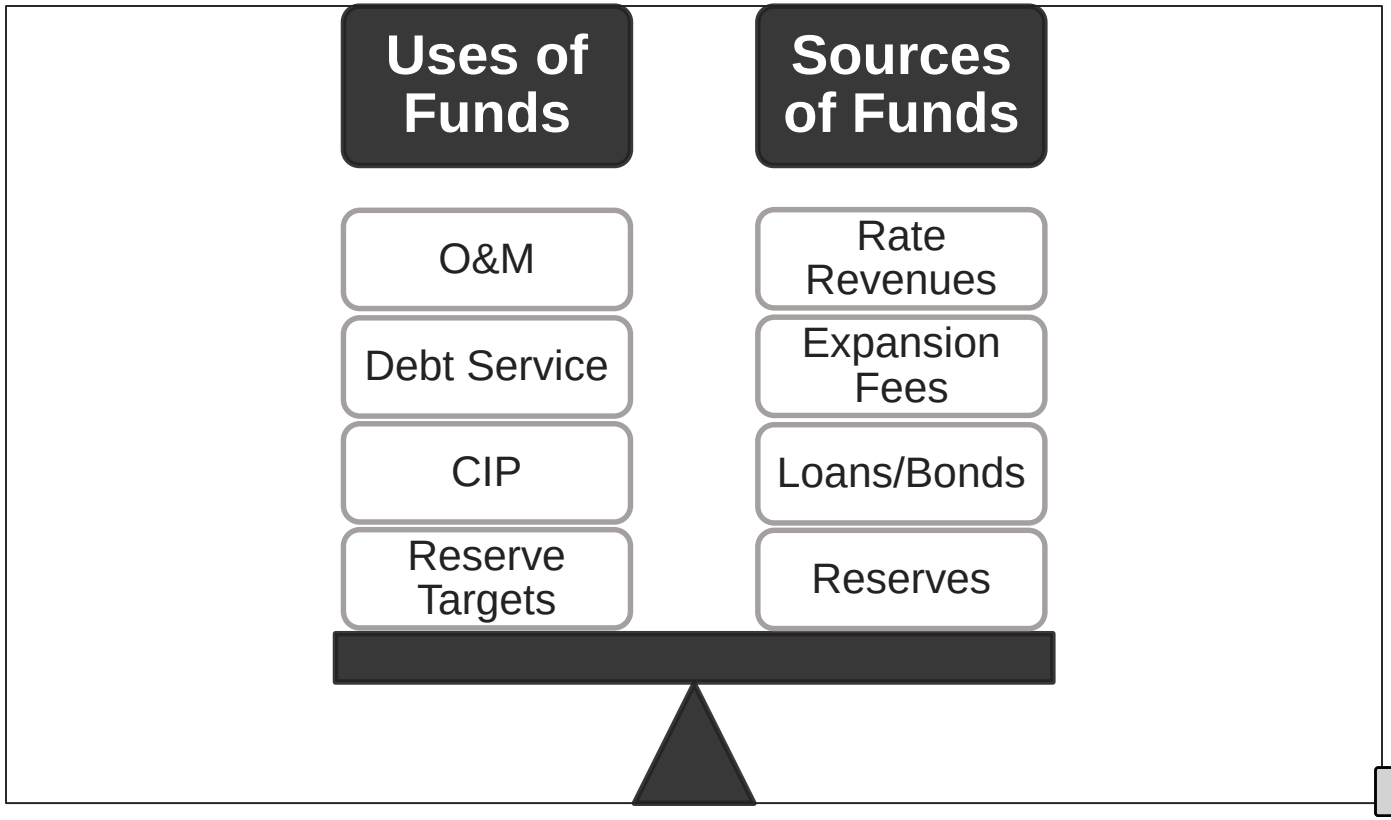

Minutes Acceptance: Minutes of Sep 14, 2020 7:00 PM (Approval of Minutes)

2020 Water Forecast

Levelized Plan of Rate Increases

The following plan of **water rate increases** was developed based on operating expenses, capital expenses, debt service requirements, and fund balance reserve targets:

	FY 2020	FY 2021	FY 2022	FY 2023	FY 2024	FY 2025	FY 2026	FY 2027	FY 2028	FY 2029	FY [illegible]0
Water Rate Plan	0.00%	3.50%	3.50%	3.50%	3.50%	3.50%	3.50%	3.50%	3.50%	3.50%	3.[illegible]
Infrastructure Rate Plan	0.00%	11.11%	20.00%	16.67%	0.00%	7.14%	0.00%	6.67%	0.00%	6.25%	0.[illegible]
Water Bill	$20.53	$21.26	$22.00	$22.76	$23.56	$24.39	$25.24	$26.13	$27.04	$27.99	$2[illegible]
Infrastructure Bill	$2.25	$2.50	$3.00	$3.50	$3.50	$3.75	$3.75	$4.00	$4.00	$4.25	$[illegible]
Total Water Bill (5,000 gal)	$22.78	$23.76	$25.00	$26.26	$27.06	$28.14	$28.99	$30.13	$31.04	$32.24	$3[illegible]

Note: Infrastructure surcharge can only be used for CIP projects

Minutes Acceptance: Minutes of Sep 14, 2020 7:00 PM (Approval of Minutes)

2020 Water Forecast

Long-Term Financial Sustainability

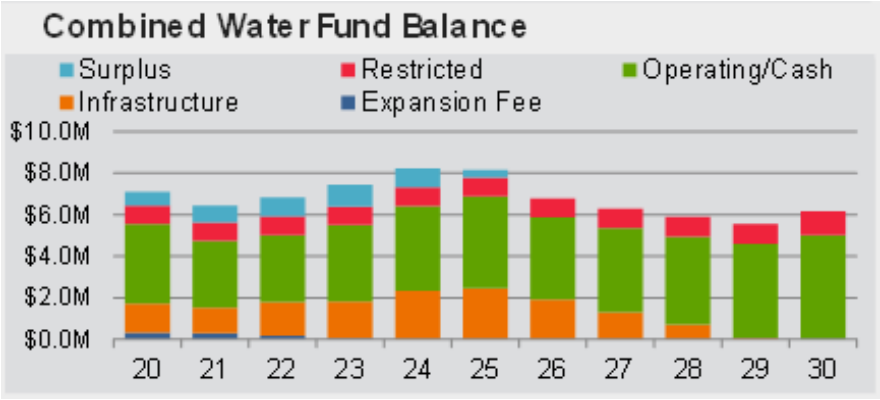

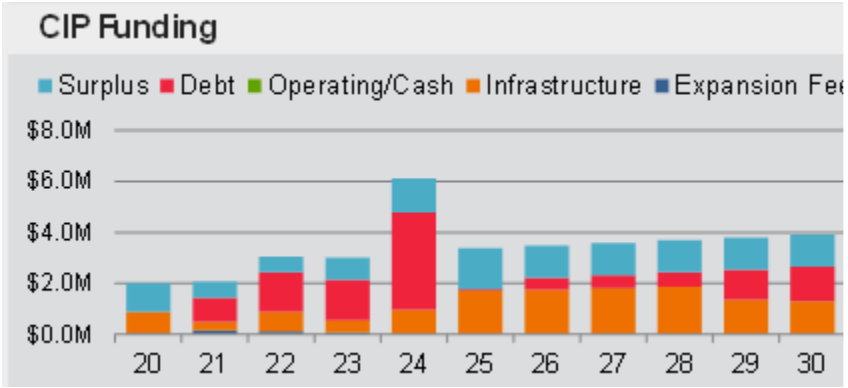

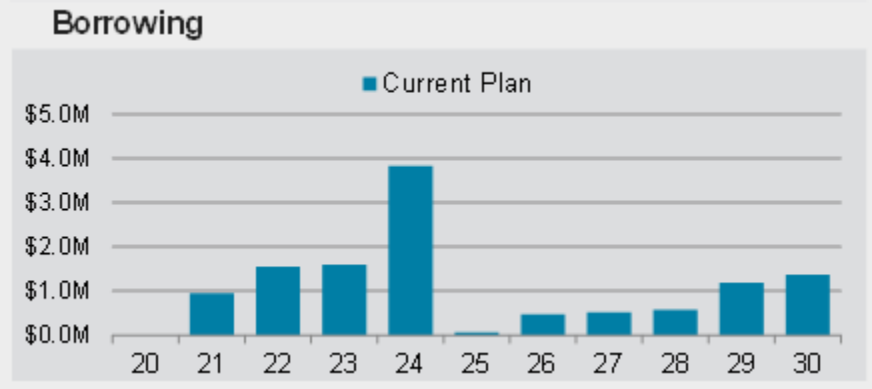

Borrowing in FY 21 - 24 for distribution system improvements and AMR. Borrowing in outer years will depend on capital needs.

Minutes Acceptance: Minutes of Sep 14, 2020 7:00 PM (Approval of Minutes)

Water KPIs

Key Performance Indicators

Debt is used to fund large projects in the year they occur; overall debt-funding of CIP is sustainable

Long-term outlook of debt service coverage is above target

Performance Indicators	Source	Stronger/ AAA	Midrange/ AA	Weaker / A	FY 2020	FY 2021	FY 2022	FY 2023	FY 2024	FY 2025	FY 2026	FY 2027	FY 2028	FY 2029	030
% CIP funded by Debt	Fitch	Less than 50%	50% to 90%	Over 90%	0%	46%	51%	53%	63%	2%	13%	15%	16%	31%	%
Cumulative % CIP funded by Debt	Fitch	Less than 50%	50% to 90%	Over 90%	0%	23%	35%	40%	49%	41%	37%	34%	31%	31%	%
All-In Debt Service Coverage	Moody's	Over 2.00	2.00 to 1.25	Less than 1.25	1.97	2.19	4.33	3.14	2.54	1.68	2.79	2.79	2.76	3.07	9
Fixed Revenue % of Total Rate Revenue	Fitch	Over 30%	30% to 15%	Less than 15%	45.7%	45.7%	45.6%	45.5%	45.5%	45.5%	45.5%	45.5%	45.5%	45.5%	5%
Days Cash on Hand	Moody's	Over 250	250 to 150	Less than 150	222	218	242	263	279	244	244	250	261	283	5

Days cash on hand remains at highest target level in outer years

Minutes Acceptance: Minutes of Sep 14, 2020 7:00 PM (Approval of Minutes)

2020 Sewer Forecast

Lower Near-Term Rate Increases

The following plan of **sewer rate increases** was developed based on operating expenses, capital expenses, debt service requirements, and fund balance reserve targets:

	FY 2020	FY 2021	FY 2022	FY 2023	FY 2024	FY 2025	FY 2026	FY 2027	FY 2028	FY 2029	FY [illegible]0
Sewer Rate Plan	0.00%	1.50%	1.50%	1.50%	1.50%	3.00%	3.00%	3.00%	3.00%	3.00%	0.[illegible]
Infrastructure Rate Plan	0.00%	11.11%	0.00%	0.00%	20.00%	0.00%	0.00%	0.00%	0.00%	0.00%	0.[illegible]
Sewer Charge	$27.50	$27.91	$28.32	$28.74	$29.18	$30.05	$30.95	$31.89	$32.84	$33.83	$3[illegible]
Infrastructure Charge	$2.25	$2.50	$2.50	$2.50	$3.00	$3.00	$3.00	$3.00	$3.00	$3.00	$[illegible]
Total Sewer Bill (5,000 gal)	$29.75	$30.41	$30.82	$31.24	$32.18	$33.05	$33.95	$34.89	$35.84	$36.83	$3[illegible]

Note: Infrastructure surcharge can only be used for CIP projects

Minutes Acceptance: Minutes of Sep 14, 2020 7:00 PM (Approval of Minutes)

2020 Sewer Forecast

Long-Term Financial Sustainability

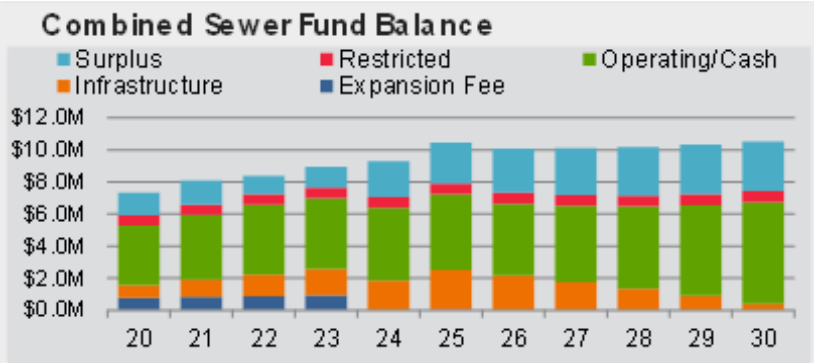

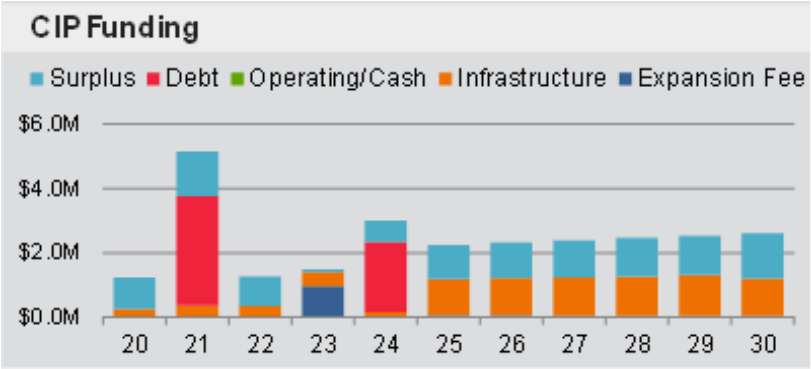

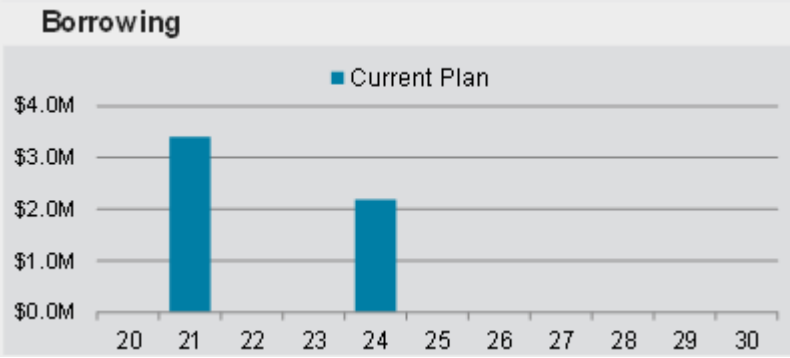

Borrowing in FY 21 & 24 for dewatering building and AMR.

Minutes Acceptance: Minutes of Sep 14, 2020 7:00 PM (Approval of Minutes)

Sewer KPIs

Key Performance Indicators

Debt is used to fund large projects in the year they occur; overall debt-funding of CIP is sustainable

Performance Indicators	Source	Stronger/ AAA	Midrange/ AA	Weaker / A	FY 2020	FY 2021	FY 2022	FY 2023	FY 2024	FY 2025	FY 2026	FY 2027	FY 2028	FY 2029	030
% CIP funded by Debt	Fitch	Less than 50%	50% to 90%	Over 90%	0%	66%	0%	0%	73%	0%	0%	0%	0%	0%	%
Cumulative % CIP funded by Debt	Fitch	Less than 50%	50% to 90%	Over 90%	0%	53%	44%	37%	46%	39%	33%	29%	26%	23%	%
All-In Debt Service Coverage	Moody's	Over 2.00	2.00 to 1.25	Less than 1.25	7.59	7.80	3.44	3.49	3.54	2.46	4.87	5.20	5.56	5.93	3
Fixed Revenue % of Total Rate Revenue	Fitch	Over 30%	30% to 15%	Less than 15%	49.1%	49.1%	49.1%	49.1%	49.1%	49.1%	49.1%	49.1%	49.1%	49.1%	.%
Days Cash on Hand	Moody's	Over 250	250 to 150	Less than 150	243	258	257	258	263	246	254	269	291	318	9

Debt service coverage exceeds highest target each year

Days cash on hand remains highest target level in outer years

Minutes Acceptance: Minutes of Sep 14, 2020 7:00 PM (Approval of Minutes)

Summary of Rate Recommendations

	FY 2020	FY 2021	FY 2022	FY 2023	FY 2024	FY 2025
Water Rate Increase**	-	3.50%	3.50%	3.50%	3.50%	3.50%
Water Infrastructure fee Increase (per kgal)	-	$0.05	$0.10	$0.10	$0.00	$0.05
Sewer Rate Increase	-	1.50%	1.50%	1.50%	1.50%	3.00%
Sewer Infrastructure fee Increase (per kgal)	-	$0.05	$0.00	$0.00	$0.10	$0.00
Avg. Monthly Residential Bill (5,000 gal)	$52.53	$54.17	$55.82	$57.50	$59.24	$61.19
$ Change	**-**	**$1.64**	**$1.65**	**$1.68**	**$1.74**	**$1.95**
% Change	**-**	**3.1%**	**3.0%**	**3.0%**	**3.0%**	**3.3%**

Projected Movement on Oakwood Utility Rate Survey?
NEGLIGIBLE

**No changes to structure of rates or minimum consumptions, EXCEPT:
Multi-family water customers currently pay a different minimum charge + a monthly charge.
In FY 2021, multi-family will pay the same rates as all other classes.

Minutes Acceptance: Minutes of Sep 14, 2020 7:00 PM (Approval of Minutes)

Water & Sewer Rate Results

Summary of Rate Recommendations

	FY 2020	FY 2021	FY 2022	FY 2023	FY 2024	FY 2025	FY 2026	FY 2027	FY 2028	FY 2029	FY 20
Water Rate Plan	0.00%	3.50%	3.50%	3.50%	3.50%	3.50%	3.50%	3.50%	3.50%	3.50%	3.50
Infrastructure Rate Plan	0.00%	11.11%	20.00%	16.67%	0.00%	7.14%	0.00%	6.67%	0.00%	6.25%	0.00
Water Bill	$20.53	$21.26	$22.00	$22.76	$23.56	$24.39	$25.24	$26.13	$27.04	$27.99	$28.
Infrastructure Bill	$2.25	$2.50	$3.00	$3.50	$3.50	$3.75	$3.75	$4.00	$4.00	$4.25	$4.2
Total Water Bill (5,000 gal)	$22.78	$23.76	$25.00	$26.26	$27.06	$28.14	$28.99	$30.13	$31.04	$32.24	$33.

	FY 2020	FY 2021	FY 2022	FY 2023	FY 2024	FY 2025	FY 2026	FY 2027	FY 2028	FY 2029	FY 20
Sewer Rate Plan	0.00%	1.50%	1.50%	1.50%	1.50%	3.00%	3.00%	3.00%	3.00%	3.00%	0.00
Infrastructure Rate Plan	0.00%	11.11%	0.00%	0.00%	20.00%	0.00%	0.00%	0.00%	0.00%	0.00%	0.00
Sewer Charge	$27.50	$27.91	$28.32	$28.74	$29.18	$30.05	$30.95	$31.89	$32.84	$33.83	$33.
Infrastructure Charge	$2.25	$2.50	$2.50	$2.50	$3.00	$3.00	$3.00	$3.00	$3.00	$3.00	$3.0
Total Sewer Bill (5,000 gal)	$29.75	$30.41	$30.82	$31.24	$32.18	$33.05	$33.95	$34.89	$35.84	$36.83	$36.

Total Sewer Bill (5,000 gal)	$29.75	$30.41	$30.82	$31.24	$32.18	$33.05	$33.95	$34.89	$35.84	$36.83	$36
Combined Water & Sewer Bill	$52.53	$54.17	$55.82	$57.50	$59.24	$61.19	$62.94	$65.02	$66.88	$69.07	$70
Combined % Change	*N/A*	*3.1%*	*3.0%*	*3.0%*	*3.0%*	*3.3%*	*2.9%*	*3.3%*	*2.9%*	*3.3%*	*1.4*

Future changes more tempered than current

Minutes Acceptance: Minutes of Sep 14, 2020 7:00 PM (Approval of Minutes)

Expansion Fees

Expansion Fee Attributes

- One-time charge paid by new connections to the City's utility system
- Revenue from charges pays for growth-related capital projects
- Method of recovery for the cost of constructing capacity

Methodology	Description	Appropriate for
Buy-in method	Fees are based on cost of constructing existing utility system	System with ample existing capacity to sell
Incremental cost method	Fees are based on planned capital improvements	System with no/very limited existing capacity to sell
Combined method	Fees are based on cost of existing system and planned capital improvements	System with existing capacity to sell and with significant growth related capital projects

Minutes Acceptance: Minutes of Sep 14, 2020 7:00 PM (Approval of Minutes)

Expansion Fee Calculation

Depreciated value of assets escalated to current replacement cost

Expansion related capital projects

Credit on outstanding debt principal

Donated assets contributions

$$\text{Expansion Fee} = \frac{\text{Plant in Service} + \text{CIP} - \text{Debt}^{1} - \text{Contributions}}{\text{System Capacity}}$$

(Measured in Equivalent Residential Units)

[1] *Debt service is paid for through user rates, so the credit ensures no double cost recovery.*

Minutes Acceptance: Minutes of Sep 14, 2020 7:00 PM (Approval of Minutes)

Water Calculation

Water Expansion Fee Calculation

Functional Component:	Source of Supply/Treatment	Distribution/ Transmission	Total
Gross Plant in Service Value	$ 18,311,664	$ 20,162,456	$ 38,474,120
Capital Improvement Cost	1,125,000	100,000	1,225,000
Gross System Value	$ 19,436,664	$ 20,262,456	$ 39,699,120
Less:			
Principal Credit	$ -	$ 4,640,000	$ 4,640,000
Specific Asset Contributions/Exclusions	129,791	77,651	207,442
General Allowance for Asset Contributions	-	8,002,105	8,002,105
Net System Value	**$ 19,306,873**	**$ 7,542,700**	**$ 26,849,573**
Fee Calculation:			
Capacity			
Units Served at Build-out	18,000	18,000	
Initial Capacity Cost per ERU	$ 1,073	$ 419	$ 1,492
Escalation Factor to Effective Year			3.00%
Calculated Fee per ERU	**$ 1,105**	**$ 432**	**$ 1,530**
Current Fee per ERU			800
Dollar Change			$ 730
Percent Change			91%

Minutes Acceptance: Minutes of Sep 14, 2020 7:00 PM (Approval of Minutes)

Sewer Calculation

Sewer Expansion Fee Calculation

Functional Component:	Collection/ Conveyance	Treatment/ Disposal	Total
Gross Plant in Service Value	$ 20,068,027	$ 27,698,378	$ 47,766,405
Capital Improvement Cost	1,000,000	-	1,000,000
Gross System Value	$ 21,068,027	$ 27,698,378	$ 48,766,405
Less:			
Principal Credit	$ -	$ 1,360,000	$ 1,360,000
Specific Asset Contributions/Exclusions	326,336	71,677	398,013
General Allowance for Asset Contributions	8,495,634	-	8,495,634
Net System Value	**$ 12,246,057**	**$ 26,266,702**	**$ 38,512,758**
Fee Calculation:			
Capacity			
Units Served at Build-out	18,000	18,000	
Initial Capacity Cost per ERU	$ 680	$ 1,459	$ 2,140
Escalation Factor to Effective Year			3.00%
Calculated Fee per ERU	**$ 701**	**$ 1,503**	**$ 2,200**
Current Fee per ERU	1,240	450	1,690
Change			$ 510
Percent Change			30%

Minutes Acceptance: Minutes of Sep 14, 2020 7:00 PM (Approval of Minutes)

Current and Proposed Expansion Fees

	Water	Sewer
Current Expansion Fee (per ERU)	$800	$1,690
Proposed Expansion Fee (per ERU)	$1,530	$2,200
$ Change	$730	$510
% Change	91%	30%

Local utility expansion fees:

- *Fairfield*:* *$3,730.00*
- BCWS: $9,000.00
- Hamilton: $3,900.00
- Middletown: $7,000.00
- Oxford: $3,360.00
- MSDGC/GCWW: $7,658.00

Minutes Acceptance: Minutes of Sep 14, 2020 7:00 PM (Approval of Minutes)

Rate Evaluation & Recommendation

Overview of Rate Evaluation

- Thorough evaluation of water and sewer minimum charges, usage charges, and infrastructure charges
- Each rate structure was evaluated based on the following criteria:
  - ✓ Legal Precedent and Local Practice
  - ✓ Common Industry Practice
  - ✓ Fairness and Equity
  - ✓ Ease of Administration
  - ✓ Customer Understanding
  - ✓ Fiscal Stability
  - ✓ Affordability

Minutes Acceptance: Minutes of Sep 14, 2020 7:00 PM (Approval of Minutes)

Rate & Fee Summary of Recommendations

1. Current rate structure achieves fiscal stability and transparency
2. Modifying multi-family rates to be consistent with other classes will result in greater equity
3. FY 21-30 plan of rate increases results in 3.0% annual overall increase to typical residential customer's combined monthly bill
4. Water expansion fees can be increased to $1,530 per ERU; sewer expansion fees can be increased to $2,200 per ERU

Next Steps & Questions…

Minutes Acceptance: Minutes of Sep 14, 2020 7:00 PM (Approval of Minutes)

City Council Ordinance
Regular Meeting - September 28, 2020

Submitted by: Greg Kathman,
Submitting Department: Development Services

Subject:
Design, Construction, and Materials Specification Handbook

Legislation Title:
Ordinance to amend Section 1113.01 of Ordinance No. 166-84, the Codified Ordinances of Fairfield, Ohio, to adopt an amended Design, Construction and Materials Specification Handbook, 2020 Sixth Edition.

Recommendation:
It is recommended that Council hold a first reading on August 10, schedule a joint public hearing with Planning Commission for August 24, and await a written recommendation from Planning Commission.

Background/Synopsis:
The Design, Construction, and Materials Specification Handbook outlines the technical requirements for construction on City-owned property, privately-owned service lines connected to a public utility, and all construction which the City has, or will, assume maintenance responsibility.

The City of Fairfield owns and maintains public infrastructure valued at hundreds of millions of dollars. The Handbook was developed to establish and communicate the standards required for any work performed on this infrastructure, to ensure its long-term function and viability.

The Handbook was last updated in 2014. This update was developed via multi-departmental collaboration.

Financial Impact:
There is no financial impact resulting from approving this Handbook update.

Emergency Provision Explanation:
N/A

Rule Suspension Requested:
No

Emergency Provision Needed:
No

Attachments:

1. 2020 Design, Construction, and Materials Specification Handbook
2. Design Construction and Maintenance-Ord
3. Signed Construction Handbook 8.26.20
4. HandbookAmendment

FAIRFIELD
OHIO

DESIGN, CONSTRUCTION, AND MATERIALS SPECIFICATION HANDBOOK

2020
SIXTH EDITION

INDEX

INTRODUCTION - SECTION 100 ..... Page 1

100.00 General Information
101.00 Design
102.00 Inspection of Construction
103.00 As-Built Plans
104.00 Procedure for Acceptance
105.00 Cost Recovery
106.00 Restoration

STORM DRAINAGE - SECTION 200..... Page 6

201.00 Storm Basin Design

- 201.01 Frequency
- 201.02 Runoff
- 201.03 Overland Flow Time
- 201.04 Rainfall Intensity
- 201.05 Stormwater Management Requirements
- 201.06 Storm Drainage and Sedimentation Control
- 201.07 Special Storm Sewer Rules
- 201.08 Drainage Maintenance and Abatement Procedure
- 201.09 Run-Off Coefficients
- 201.10 Declaration of Covenants and Restrictions
- 201.11 Watercourse
- 201.12 Notification of Spills

202.00 Storm Sewer

- 202.01 Pipe Size
- 202.02 Values of “n”
- 202.03 Minimum Size
- 202.04 Minimum Cover
- 202.05 Minimum Mean Velocity
- 202.06 Maximum Mean Velocity
- 202.07 Maximum Manhole Spacing
- 202.08 Manhole Placement
- 202.09 Maximum Inlet Spacing
- 202.10 Outlet Protection
- 202.11 Steep Slope Protection
- 202.12 Headwalls

203.00 Channel Design

- 201.01 Pipe Size
- 203.02 Values of “n”
- 203.03 Side Slopes
- 203.04 Minimum Freeboard

Attachment: 2020 Design, Construction, and Materials Specification Handbook (1575 : Design, Construction, and Materials Specification

- 203.05 Minimum Grade
- 203.06 Channel Protection
- 203.07 Policy

204.00 Construction Requirements and Materials Specifications

- 204.01 Trench Excavation
- 204.02 Pipe Bedding
- 204.03 Pipe Laying
- 204.04 Joints
- 204.05 Backfilling Trenches
- 204.06 Pipe Material Specification for Storm Sewer
- 204.07 Manholes, Catch Basins, and Structures
- 204.08 Drywells

ROADWAY - SECTION 300 ..... Page 40

301.00 Design Intersections

302.00 Minimum Pavement Widths

303.00 Street Design Standards

304.00 Pavement Standards

- 304.01 Rigid Pavement
- 304.02 Flexible Pavement
- 304.03 Pavement Design and Acceptance
- 304.04 Driveways, Culverts, and Sidewalks
- 304.05 Road Cut Restoration/Trench Excavation
- 304.06 Cold Weather Placement of Concrete

305.00 Work Within the Right-of-Way

306.00 Traffic Impact Studies

307.00 Small Cell Design Guidelines

308.00 Access Management Standards and Guidelines

WATER SUPPLY - SECTION 400 ..... Page 53

401.00 Construction Requirements and Materials Specifications

- 401.01 Determination of Water Use
- 401.02 Dead Ends
- 401.03 Pipe Size
- 401.04 Pressure
- 401.05 Service Valves
- 401.06 Depth of Cover

402.00 Water Main Pipe Details

- 402.01 Ductile Iron Pipe
- 402.02 Polyethylene Encasement
- 402.03 Pipe Joint
- 402.04 Fittings
- 402.05 Tapping Sleeves and Tapping Valves
- 402.06 Tapping Saddles
- 402.07 Water Main Valve Boxes

- 402.08 Gate Valves
- 402.09 Location Frequency

403.00 Fire Hydrants and Fire Lines

- 403.01 Fire Hydrants
- 403.02 Color of Hydrants
- 403.03 Spacing
- 403.04 Location
- 403.05 Double Check Detector Assembly (DCDA)
- 403.06 Fire Line Vault
- 403.07 Post Indicator Valve (PIV)
- 403.08 Operating Test
- 403.09 Fire Department Connections (FDC)

404.00 Water Service Connections

- 404.01 Cross Connections
- 404.02 Dead Ends
- 404.03 Water Services
- 404.04 Corporation Stop
- 404.05 Curb Stop

405.00 Meter Sets

- 405.01 Classification of Meter Sets
- 405.02 General Requirements
- 405.03 Outdoor Meter Sets
- 405.04 Indoor Meter Sets
- 405.05 Meters
- 405.06 Servicing of Meters
- 405.07 Charges for Change of Meters
- 405.08 Protection of Meters
- 405.09 Meters Required
- 405.10 Number of Meters
- 405.11 Manifolded Meters
- 405.12 Deduct Meters; Water-Only Meters

406.00 Separation of Water Mains and Sewers

- 406.01 Separation of Water Mains and Sewers
- 406.02 Parallel Installation of Water and Sewer Lines
- 406.03 Crossing of Water and Sewer Lines

407.00 Protection and Interruption

- 407.01 Protection of Existing Underground Utilities
- 407.02 Service Interruptions

408.00 Excavation

- 408.01 Trenching and Excavation
- 408.02 Allowable Removement of Pavement
- 408.03 Trenchless Methods
- 408.04 Protection of the Public

409.00 Installation

- 409.01 Installation

- 409.02 Thrust Blocking
- 409.03 Restrained Joint Systems
- 409.04 Pipe Cutting
- 409.05 Connection to City Mains

410.00 Backfilling

- 410.01 Backfilling of Trenches
- 410.02 Backfilling under Pavement

411.00 Testing, Disinfecting, and Flushing Mains

- 411.01 Disinfection and Flushing of Water Mains

412.00 Pressure and Leakage Test

- 412.01 Pressure Testing
- 412.02 As-Builts

413.00 Backflow Prevention, Cross-Connection Control, and Booster Pumps

- 413.01 General
- 413.02 Booster Pumps
- 413.03 Violations

WASTEWATER - SECTION 500.....Page 79

501.00 Discharges to Wastewater Collection System

- 501.01 Prohibited Discharges
- 501.02 Special Discharges

502.00 Approval

- 502.01 Wastewater Approval
- 502.02 Determination of the Amount of Sewage and Average Flows
- 502.03 Peak Flows

503.00 Design of Sewers

- 503.01 Approval of Sewers
- 503.02 Design Capacity and Design Flow
- 503.03 Minimum Size
- 503.04 Depth
- 503.05 Buoyancy
- 503.06 Location
- 503.07 Flow Velocities
- 503.08 Minimum Allowable Slope
- 503.09 Minimum Flow Depths
- 503.10 Minimum Solids Deposition
- 503.11 Steep Slope Protection
- 503.12 Alignment
- 503.13 Changes in Pipe Size
- 503.14 Connections
- 503.15 Protection of Water Supplies
- 503.16 Parallel Installation
- 503.17 Crossings

504.00 Laterals

- 504.01 Lateral Size

- 504.02 Lateral Slope
- 504.03 Location
- 504.04 Depth
- 504.05 Alignment
- 504.06 Tap Connections
- 504.07 Clean Outs
- 504.08 Bedding
- 504.09 Backfilling Under Pavement
- 504.10 Sewer Stubs
- 504.11 Cured-In-Place Pipe (CIPP) Service Lateral Lining

505.00 Sewer Main Pipe Materials

- 505.01 Force Main and Gravity Sewers
- 505.02 High Density Polyethylene Pipe (HDPE)
- 505.03 PVC Pipe
- 504.04 Ductile Iron Sewer Pipe
- 505.05 Deflection of Pipe
- 505.06 Joints
- 505.07 Concrete Encasement
- 505.08 Casing Spacers and Insulators

506.00 Manholes

- 506.01 Manholes
- 506.02 Manhole Castings
- 506.03 Manhole Installation
- 506.04 Drop Inlets
- 506.05 Flow Channel
- 506.06 Control and Inspection Manholes
- 506.07 Manhole Inspections

507.00 Trenching and Excavation

- 507.01 Protection of Underground Utilities
- 507.02 Installation
- 507.03 Pipe Installation
- 507.04 Laser System

508.00 Testing

- 508.01 Testing Requirements of Gravity Sewers
- 508.02 Vacuum Testing of Manholes
- 508.03 Deflection of Pipe
- 508.04 Closed Circuit Television Inspection(CCTV)
- 508.05 Testing Requirements for Force Main

509.00 Fat, Oil, and Grease Prevention

- 509.01 Fat, Oil, and Grease (FOG), Waste Food, and Sand Interceptors

510.00 Grinder Pumps and Low-Pressure Force Mains

- 510.01 Grinder Pumps and Low-Pressure Force Mains Systems
- 510.02 Complete System Design Requirements for Low-Pressure Mains
- 510.03 Maximum Daily Design
- 510.04 Basic Design and Construction Requirements for Low-Pressure Systems

- 510.05 Operation and Maintenance
- 510.06 Construction Plan Requirements
- 510.07 Deed Restrictions

511.00 Building Permits and Occupancy
512.00 As-Builts

FIRE SERVICES - SECTION 600.....Page 125

601.00 Fire Hydrants

- 601.01 Fire Hydrants
- 601.02 Color of Hydrants
- 601.03 Spacing
- 601.04 Location
- 601.05 Fire Protection
- 601.06 Fire Line Vault
- 601.07 Double Check Detector Assembly (DCDA)
- 601.08 Post Indicator Valve (PIV)
- 601.09 Operating Test
- 601.10 Fire Department Connections (FDC)

602.00 Knox Box Device
603.00 Exterior Door Identification

APPENDIX.....Page 131

Appendix A – Work Within the Public Right-of-Way
Appendix B – Traffic Impact Studies
Appendix C – Small Cell Infrastructure Within the Right of Way

STANDARD CONSTRUCTION DRAWINGS .....Page 172

Attachment: 2020 Design, Construction, and Materials Specification Handbook (1575 : Design, Construction, and Materials Specification

INTRODUCTION – SECTION 100

Attachment: 2020 Design, Construction, and Materials Specification Handbook (1575 : Design, Construction, and Materials Specification

SECTION 100

INTRODUCTION AND PROCEDURE

100.00 GENERAL INFORMATION

The Design, Construction, and Materials Specification Handbook applies to all construction on City-owned property within the public right-of-way or easement, as well as privately owned service lines connected to a public utility, and all construction which the City has, or will assume, maintenance responsibility.

Unless modified, deleted, replaced, or otherwise changed by requirements contained herein, or contained in the City of Fairfield Standard Construction Drawings, construction requirements and material specifications shall conform to the current edition of the "State of Ohio Department of Transportation – Construction and Material Specifications", "State of Ohio Department of Transportation – Standard Construction Drawings", and other manuals/reference materials included herein.

Unless modified, deleted, replaced, or otherwise changed by requirements contained herein, items pertaining to traffic control shall conform to the most current edition of the "Ohio Manual of Uniform Traffic Control Devices" and "State of Ohio Department of Transportation – Standard Sign Design Manual."

Plans are approved subject to compliance with all applicable laws, rules, regulations, and standards. An approval of plans by the City of Fairfield does not constitute a waiver of such compliance.

The proposed construction project may be constructed only in accordance with approved plans. There will be no deviation from the approved plans without the expressed, written approval of the City of Fairfield.

Approval of plans does not constitute an assurance that the proposed project will properly function, operate, or meet compliance with Federal, State, or City laws and regulations.

101.00 DESIGN

It is not the intent of this document to eliminate responsibility of the design engineer for the technical adequacy of his or her design or freedom to use their engineering judgment and discretion in the practice of their profession. It is recognized that matters of engineering design cannot be fully covered in every situation. Any design methods or

Attachment: 2020 Design, Construction, and Materials Specification Handbook (1575 : Design, Construction, and Materials Specification

criterion different than those listed herein will be given due consideration provided the proposed variances are submitted in writing to the City of Fairfield.

The City will, at any time during design or construction, have the authority to require the modification of any engineering or construction detail, whenever necessary, for the protection of the public interests. Such modification does not relieve the design engineer of his or her responsibility.

102.00 INSPECTION OF CONSTRUCTION

At least 2 working days prior to the start of any construction, the Developer or Contractor shall notify the Construction Services Division at (513) 867-4200 of their intent to commence work. Inspection services shall be provided by the City of Fairfield Construction Services Division for all construction projects including public work projects, subdivisions, or any project which will be maintained in the future with public funds. When the extent of work in any project so justifies, the Public Works Director may provide for a full-time inspector. When a project does not require full-time inspection, the Public Works Director may provide for intermittent inspection and may use the inspector for more than one such project.

The City shall send a monthly bill to the contractor for the time spent for inspection. Fees for inspection will be billed at the hourly rate paid to the inspectors by the City, plus 30 percent, with a minimum billing of 1/2 hour. If inspection is required at a time when the inspector is designated to receive overtime pay, the charge shall be at the overtime rate paid the inspector, plus 30 percent, with a minimum billing of 1/2 hour. The City reserves the right to request testing on any material (e.g., concrete, asphalt, subgrade, or trench backfill, etc.) at any time it deems necessary. Fees for outside inspection and testing will be billed to the Contractor at 1.5 times the cost. All fees must be paid in full prior to the work being accepted by the City.

The work is under the control and supervision of the Developer or Contractor until written acceptance is given by the Public Works Director and/or the Public Utilities Director. The City inspector shall check periodically as the work progresses and shall call to the attention of the person in charge of the work any deviations, omissions, or unsatisfactory work as noted. However, no acceptance of any portion of the work is to be inferred by the action or lack of action of the inspector.

Attachment: 2020 Design, Construction, and Materials Specification Handbook (1575 : Design, Construction, and Materials Specification

103.00 AS-BUILT PLANS

At the completion of construction, the plans shall be revised, as necessary, to provide as-built plans. This work shall be done by the Contractor's engineer who was responsible for setting grades and the staking for improvements. As-built plans containing any changes to elevations, major drainage ditches/swales, structures, retention/detention basins, water lines and appurtenances, sewer lines and appurtenances, and buffering landscape mounds shall be submitted to the Public Works Director and/or the Public Utilities Director for review and approval. The following note shall be included on the as-built drawing:

> "The planned contour lines on this grading plan do not necessarily reflect the final grading conditions for each individual lot. Please refer to ballooned spot elevations and individual plot plans for as-built data."

As-built plans shall be provided on reproducible sheets measuring 24 inches by 36 inches and sealed and signed by the engineer to certify that the as-builts are per field conditions, along with an accepted electronic format.

104.00 PROCEDURE FOR ACCEPTANCE

The procedure for acceptance of public improvements that will be dedicated to and accepted for future maintenance by the City of Fairfield is as follows:

1. Subdivision improvements shall be dedicated and accepted in accordance with the Codified Ordinances of Fairfield, Ohio relative to subdivisions of land. The provisions for inspection of construction and as-built plans shall apply to subdivisions and related public improvements.

2. Other non-subdivision public improvements must meet City specifications for materials and construction methods and must have been inspected by City inspectors/staff during construction as provided herein.

3. The City of Fairfield shall require a performance bond in an amount and with surety satisfactory to the Law Director to assure completion of a public improvement prior to issuance of a permit or permission to construct the public improvement. The City shall also require a one year maintenance bond for such improvement in an appropriate amount, generally 10 percent of the cost of the public improvement.

4. The City of Fairfield will provide a punch list of any items requiring repairs prior to final acceptance and release of the maintenance bond.

Attachment: 2020 Design, Construction, and Materials Specification Handbook (1575 : Design, Construction, and Materials Specification

5. As-built plans will be provided to the City within 30 days after the public improvement becomes operable in accordance with the requirements.

6. The City of Fairfield may take immediate action to correct any defect in materials, methods, or workmanship which jeopardizes the public health, safety, or welfare in the construction and/or maintenance of a public improvement. The installer of the public improvement shall be responsible for reimbursement to the City of costs incurred.

7. The installer of the public improvement shall be responsible for the preparation, proper execution, and recording of all legal documents necessary for the dedication of right-of-way, easements, or other conveyances/ legal title in conjunction with the public improvement, subject to the approval of the Law Director.

This procedure does not apply to public improvements performed under formal contract awarded by the City of Fairfield, the conditions for acceptance of which shall be specified in the contract documents.

105.00 COST RECOVERY

The City reserves the right to recover from responsible parties any and all costs associated with or related to damages to public infrastructure, including but not limited to: roadways, drinking water systems, storm water and sanitary sewer systems. Cost recovery is authorized regardless of whether the damage was intentional or unintentional. Costs may be recovered for any efforts associated with the mitigation of the damaged infrastructure, including but not limited to: City staff time, after-hour call-outs, materials, equipment, contractor services.

106.00 RESTORATION

Any person performing work within and/or adjacent to the road right of way shall fully restore the area to original conditions within 2 weeks of work completion. Restoration may include but is not limited to: road, driveway apron, and/or sidewalk restoration, trench backfilling, site grading, topsoil application, seeding, and straw application.

STORM DRAINAGE – SECTION 200

Attachment: 2020 Design, Construction, and Materials Specification Handbook (1575 : Design, Construction, and Materials Specification

SECTION 200

STORM DRAINAGE

INTRODUCTION

The latest published edition of the following documents shall be the accepted standard for materials and/or procedures for the construction, modification, alteration, or expansion of the City of Fairfield's roadway infrastructure:

1. ***City of Fairfield Design, Construction, and Materials Specification Handbook***
2. ***City of Fairfield Codified Ordinances***
3. ***City of Fairfield Comprehensive Plan***
4. ***Ohio Manual of Uniform Traffic Control Devices (OMUTCD)***
5. ***Ohio Department of Transportation Location and Design Manual Volume 2 Roadway Design (ODOT L&D)***
6. ***Ohio Department of Transportation Construction and Materials Specification (ODOT CMS)***
7. ***Ohio Department of Transportation Construction Administration Manual of Procedures (ODOT MOP)***
8. ***Ohio Department of Natural Resources Rainwater and Land Development Manual***
9. ***Ohio EPA Laws and regulations (OEPA)***

If a conflict shall exist between reference sources, the more restrictive requirement shall prevail. The Public Works Director shall provide interpretation as requested.

Plan approval by the City of Fairfield does not imply nor assure approval by any other governing jurisdiction. Plans are approved subject to the conditions of compliance with all applicable laws, rules, regulations and standards. The proposed project may be constructed only in accordance with the approved plans. There may be no deviation from the approved plans without the written approval of the City. Approval of the plans does not constitute an assurance that the proposed project will operate in compliance with all Ohio laws and regulations. Plans should also note "All work within the right of way within City limits will require a permit from Public Works". Permits can be found at https://www.fairfield-city.org/448/Permits-Specifications

201.00 STORM DESIGN BASIS

201.01 Frequency

- Storm sewers, open ditches, drive culverts — 10-year frequency
- Roadway culverts — 25-year frequency
- Protection for buildings — 50-year frequency

(Ord.167-95. Passed 11-13-95)

Attachment: 2020 Design, Construction, and Materials Specification Handbook (1575 : Design, Construction, and Materials Specification

201.02 Runoff

- 100 acres or less — Rational method, Q = CIA
- More than 100 acres — S.C.S. TR-55 method

201.03 Overland Flow Time

- **Use Chart 201-A**
- First pavement inlet — Min. 10 minutes
- First ditch catch basin — Min. 15 minutes

201.04 Rainfall Intensity

- **Use Chart 201-B**

201.05 Stormwater Management Requirements

1. INTRODUCTION

a) Stormwater Management refers to the collection, safe conveyance, and storage of excess storm runoff on a development or redevelopment site that involves use of a single or multiple stormwater management facility(ies) to capture, temporarily store, and treat runoff with gradual release of the stored runoff at an acceptable flow rate into the downstream conveyance system. Stormwater management facilities include, but are not limited to, detention basins or retention basins.

b) Detention basins are dry surface areas created by constructing an excavated or embankment basin.

c) Retention basins are permanent ponds where additional storage capacity is provided above the normal water level.

d) The objective of a detention/retention facility is to regulate the runoff from a rainfall and to control discharges to downstream areas in order to reduce the impact on downstream drainage systems.

2. STORMWATER MANAGEMENT GENERAL REQUIREMENTS

a) **Quantitative Control.** Detention/retention of stormwater will be required for each subdivision or land development and redevelopment activity unless specifically exempted.

b) **Qualitative Control**. Stormwater quality control shall be implemented into sites within developing and redeveloping areas in accordance with general and specific requirements

Attachment: 2020 Design, Construction, and Materials Specification Handbook (1575 : Design, Construction, and Materials Specification

outlined in the latest edition of the Ohio EPA General (NPDES) permit for stormwater discharges associated with construction activity (see Part IIIG2e of the Ohio EPA's NPDES permit (Permit No. OHC0005 or latest edition).)

c) **Expansion/Redevelopment**. If a site is redeveloped (demolition of existing structures and/or construction of new structures), the entire site shall be brought up to current stormwater standards.

d) **Stormwater Detention Must Meet Current Standards**. If a site is improved or expanded such that the impervious area of the site is increased by an amount greater than or equal to 50 percent of the original development of the site, stormwater detention provisions shall be provided to improve the stormwater runoff from the entire site to the maximum extent practicable. The City reserves the right to inspect areas downstream of the discharge point and require stormwater detention improvements based upon the findings of the inspection.

e) **Stormwater Detention Improvements Shall Be Made To Improve The Impact Of The Stormwater Runoff From The Site**. For sites originally developed after 1980, the calculations shall be based upon a virgin site (runoff coefficient of 0.30).

f) **Stormwater Quality**. Regardless of when the site was originally developed, the entire site shall be treated for stormwater quality according to the regulations found in this manual.

3. EXEMPTIONS TO STORMWATER MANAGEMENT QUANTITATIVE CONTROL REQUIREMENTS

a) The developer may apply to the City Engineer for exemption from requirement for construction of stormwater management quantitative control facilities.

b) Each request will be reviewed on its own merit and as it affects the entire drainage area in which it lays and into which it flows.

c) If an exemption for stormwater management quantitative control is granted by the City Engineer, the developer shall be required to pay a fee in lieu of the construction of the stormwater management facilities. The fee shall be at a rate per cubic foot of detention/retention volume that would have been required if an exemption had not been granted, as indicated in the City of Fairfield Planning & Zoning Code. This fee must be paid to the City prior to recording of the plat of a subdivision or issuance of the building permit if no subdivision plat is involved. Exemptions will only be considered in cases

Attachment: 2020 Design, Construction, and Materials Specification Handbook (1575 : Design, Construction, and Materials Specification

where construction is impractical, not feasible, and/or not in the best interests of the City of Fairfield

d) Quantitative requirements for expansions to existing development will generally not be considered for stand-alone improvements of less than 0.25 acres.

e) The developer may appeal the denial of an exemption to the Board of Zoning Appeals.

4. DESIGN

a) **Runoff and Volume Calculation Methods**. The methods outlined in the City Subdivision Rules and Regulations**,** as well as requirements contained in Section 1117.07, Section 1182.03, and requirements contained in the City of Fairfield Design, Construction, and Material Specifications document (latest edition), shall be used to determine the runoff and storage volumes.

1) Quantity of Runoff

i. The peak rate of runoff during the 100-year post development storm cannot exceed the peak rate of runoff during the 2-year pre-development storm.

ii. For those areas where a study of the downstream area indicates the extended time of high discharge and/or velocity due to restricted release rate and storage may cause flooding and/or excessive erosion, the City Engineer may require additional controls.

2) Quality of Runoff

i. The design of stormwater quality controls, also known as Post-Construction Best Management Practices, shall comply with standards and requirements as contained in the latest edition of the Ohio EPA General (NPDES) permit for stormwater discharges associated with construction activity (See Part IIIG2e of the Ohio EPA's NPDES Permit).

b) **Basin Construction**

1) The side slopes of a detention/retention basin shall not exceed four to one (4:1) unless the existing topographic conditions of the development site make this impractical.

Attachment: 2020 Design, Construction, and Materials Specification Handbook (1575 : Design, Construction, and Materials Specification

2) The bottom of the basin shall be seeded or sodded and sloped to the outlet flow control device. A method of carrying low flow through the basin shall be provided and include appropriate erosion control.

3) The maximum water depth for detention basins shall be 6 feet.

4) The top of the embankment shall have a minimum width of 8 feet.

5) Outlet flow control devices may be either single-stage or multi-stage.

6) Seed, sod, or other approved erosion control methods/devices shall be used to protect all basin slopes.

7) An emergency spillway capable of discharging a 100-year storm event at a depth not to exceed 1 foot and at non-erosive velocities (less than 10 feet per second) for the spillway lining materials and downstream surfaces over and through which the spillway discharge will flow, shall be constructed at the discharge end of every detention/retention facility upon undisturbed/unexcavated material.

8) Other requirements may be imposed for specific cases.

5. SUBMISSION REQUIREMENTS

Plans and supporting data to verify storage volumes, release rates, etc., shall be submitted. The submission shall include, but is not limited to, the following:

a) A plan, which may be the Improvement Plan, Drainage and Grading Plan, or similar plan at a scale of 1" - 100' or larger, shall be submitted and contain at least the following information:

1) The outline and designation of the drainage area(s). Clearly label the impervious, pervious, and total areas.

2) All existing and proposed drainage facilities.

3) Existing and proposed contours.

4) Existing and proposed buildings/structures.

5) The detention/retention basin with outlet structure(s) details.

Attachment: 2020 Design, Construction, and Materials Specification Handbook (1575 : Design, Construction, and Materials Specification

6) Pertinent elevations (e.g. water surface, 100-year ponding, flowline of flow control devices, etc.)

7) A recommendation from a soil engineer for the foundation and design of the embankment to be used for the retention/detention basin.

8) Any other information required by the City to clarify intent or design features.

b) All calculations and other supporting data in sufficient detail and form to facilitate an expedient and accurate review.

6. FEE

Work performed by professional consultants and other costs incurred by the City will be charged to the applicant at their billed cost plus 10 percent. The fee must be paid in full prior to approval of the plans by the City Engineer. (Ord. 25-14. Passed 4-14-14)

201.06 Storm Drainage and Sedimentation Control

1. INTENT

a) No change shall be made in the contour of the land; no grading, excavating, removal or destruction of the topsoil, trees, or other vegetative cover of the land shall be commenced until such time that a plan for minimizing erosion and sedimentation has been processed with and approved by the City Engineer or Public Works Director or there has been a determination by the Planning Commission that such plans are not required.

b) For sites regulated under the Ohio EPA General Construction Permit for stormwater discharges (Ohio EPA permit no. OHC000005, or latest edition), the person seeking coverage under that Ohio EPA Construction permit, shall provide a copy of the "Notice of Intent" to do so and a copy of the Ohio EPA's related "Letter of Coverage Authorization", prior to start of construction.

c) No subdivision shall be approved unless:

1) There has been a plan approved by the City Engineer or Public Works Director that provides for minimizing erosion and sediment as consistent with the intent of this chapter, and performance bond or other acceptable securities are deposited with the City in the form of escrow guarantee which will insure installation and completion of the required improvements; or

Attachment: 2020 Design, Construction, and Materials Specification Handbook (1575 : Design, Construction, and Materials Specification

2) There has been a determination by the Planning Commission and the Ohio EPA that such plans are not required.

2. PERFORMANCE PRINCIPLES AND STANDARDS

a) The following principles are effective in minimizing erosion and sedimentation and shall be met where applicable for a developing site and included in the control plan:

1) Development or redevelopment sites that are covered under the Ohio EPA General Construction Permit shall develop a stand-alone Stormwater Pollution Prevention Plan (SWP3) per the requirements of the Ohio EPA Permit OHC000005 (or latest edition). This SWP3 shall be provided to the City Engineer for review when the plan for minimizing erosion and sedimentation is submitted for the development proposal. After the SWP3 is approved and during construction, it shall be kept on the construction site, along with a copy of the NOI and letter granting permit coverage under the Ohio EPA general construction permit.

2) Stripping of vegetation, regrading or other development shall be done in such a way that will minimize erosion. Whenever feasible, natural vegetation shall be retained, protected, and supplemented.

3) Development plans shall preserve salient natural features, keep cut-fill operations to a minimum, and ensure conformity with topography so as to create the least erosion potential.

4) The smallest practical area of land shall be exposed at any one time; the topsoil shall be preserved and returned to the surface areas to be revegetated.

5) Disturbed soils shall be stabilized as quickly as practicable with temporary vegetation and/or mulching to protect exposed critical areas during development.

6) The permanent final vegetation and structural erosion control and drainage measures shall be installed as soon as practical in the development.

7) Provisions shall be made to effectively accommodate the increased run-off caused by changed soil and surface conditions during and after development. Where necessary, surface water run-off shall be structurally retarded.

8) Sediment in the run-off water shall be trapped until the disturbed area is stabilized by the use of debris basins, sediment basins, silt traps or similar measures.

Attachment: 2020 Design, Construction, and Materials Specification Handbook (1575 : Design, Construction, and Materials Specification

b) The following standards shall be followed in all water management and sediment control plans:

1) All lots shall be graded to provide proper drainage away from buildings and to dispose of it without ponding. All land within a development shall be graded to drain and dispose of surface water without ponding, except where waived by the Planning Commission.

2) All drainage provisions shall be of such design to adequately handle the surface run-off and to carry it to the nearest suitable outlet such as a curbed street, storm drain, or natural watercourse. Where drainage swales are used to divert surface waters away from buildings, they shall be sodded, planted, or paved as required and shall be of such slope, shape and size as to conform to the requirements of the City. (Ord. 167-95. Passed 11-13-95.)

3) The installation of the specified water management and sediment control measures shall be accomplished in accordance with the most recent standards and specifications available from the Ohio Department of Natural Resources document entitled, "Rainwater and Land Development Manual". A copy of such standards and specifications will be kept on file in the offices of the Public Works Director and Development Services Director. (Ord. 127-03. Passed 8-11-03.)

c) The approved plan for water management and sedimentation control required of the landowner or his agent shall include, but not be restricted to, the following requirements:

1) A description of the nature and type of the construction activity.

2) Indicate the total area of the site and the area of the site that is expected to be disturbed (i.e., grubbing, clearing, excavation, filling or grading, including off-site borrow areas).

3) An estimate of the impervious area and percent imperviousness created by the construction activity.

4) A calculation of the runoff coefficients for both the pre-construction and post-construction site conditions.

5) Existing data describing the soil and, if available, the quality of any discharge from the site.

Attachment: 2020 Design, Construction, and Materials Specification Handbook (1575 : Design, Construction, and Materials Specification

6) The name and/or location of the immediate receiving stream or surface water(s) and the first subsequent named receiving water(s) and the areal extent and description of wetlands or other special aquatic sites at or near the site which will be disturbed or which will receive discharges from disturbed areas of the project. For discharges to the MS4, the point of discharge to the MS4 and the location where the MS4 ultimately discharges to a stream or surface water of the state shall be indicated.

7) A description of prior land uses at the site.

8) A site map identifying the following:

i. Limits of earth-disturbing activity of the site including associated off-site borrow or spoil areas that are not addressed by a separate NOI and associated SWP3.

ii. Elevations and/or contours, dimensions, location, and extent of all work proposed to be done, and the existing elevations and/or contours of the land all in 2-foot increments. A delineation of drainage watersheds expected during and after major grading activities as well as the size of each drainage watershed, in acres.

iii. Soils types for all areas of the site, including locations of unstable or highly erodible soils.

iv. Location of any buildings, structures, utilities, sewers, water, and storm drains on the site where the work is to be performed.

v. Location of any building or structure on land of adjacent property owners within 100 feet of the site.

vi. The location of all erosion and sediment control practices that are designed in accordance with the Ohio EPA General Construction Permit requirements and ODNR Rainwater and Land Development manual standards, including the location of areas likely to require temporary stabilization during the course of site development.

vii. Sediment and stormwater management basins noting their sediment settling volume and contributing drainage area.

Attachment: 2020 Design, Construction, and Materials Specification Handbook (1575 : Design, Construction, and Materials Specification

viii. For subdivided developments where the SWP3 does not call for a centralized sediment control capable of controlling multiple individual lots, a detailed drawing of a typical individual lot showing standard individual lot erosion and sediment control practices.

ix. The location of designated construction entrances where the vehicles will access the construction site.

x. The location of any in-stream activities including stream crossings.

xi. Areas designated for the storage or disposal of solid, sanitary, and toxic wastes, including dumpster areas, areas designated for cement truck washout, and vehicle fueling.

xii. Detailed plans of all drainage provisions, retaining walls, cribbing, vegetative practices, erosion and sediment control measures, location of proposed fences around sediment basins, steep excavations, or ponding areas, and other protective devices to be constructed in connection with, or as a part of the proposed work, together with a map showing the drainage area of land tributary to the site, and estimated cubic foot per second run-off of the area served by any drain, computed in accordance with current City storm drainage criteria.

9) Structural practices shall be used to control erosion and trap sediment from a site remaining disturbed for more than 14 days. Sediment control structures shall be functional throughout the course of earth disturbing activity. Sediment basins and perimeter sediment barriers shall be implemented prior to grading and within seven days from the start of grubbing.

10) Temporary and permanent soil stabilization controls in accordance with the Ohio EPA General Construction Permit requirements and ODNR Rainwater and Land Development manual standards.

11) Detailed drawings for all structural practices that include installation, inspection, and maintenance procedures.

12) A certification of the quantity of excavation and fill involved.

Attachment: 2020 Design, Construction, and Materials Specification Handbook (1575 : Design, Construction, and Materials Specification

13) A timing schedule and sequence indicating the anticipated starting and completion dates of the development; stripping and/or clearing, rough grading and construction, final grading and vegetative establishment, and maintenance and the time of exposure of each area prior to the completion of effective erosion and sediment control measures.

14) The estimated cost of the grading and/or filling and the cost of the required erosion controls.

d) Approval Procedures

1) Three backline copies of complete plans shall be filed with the Development Services Department.

2) In order to insure that emergency measures could be taken by the City if the water management and sediment control measures were not implemented according to the agreed upon plan and schedule, a performance bond in the amount of the cost of the water management and sediment control measures shall be required to be filed with the City. Such performance bond shall authorize immediate payment to the City upon certification of the Planning Commission that necessary emergency work must be done immediately to ensure proper water management and sediment control as a result of the landowner's failure to complete or adhere to the approved water management and sediment control plan.

3) The Planning Commission and the City Engineer shall make a continuing review and evaluation of the methods used and overall effectiveness of the stormwater management and sediment control program. (Ord. 167-95. Passed 11-13-95.)

e) Enforcement

1) The Public Works Director or his designee shall enforce compliance with the approved sediment control plans for projects that involve the construction of public infrastructure, including residential and commercial subdivisions.

2) The Development Services Director or his designee shall enforce compliance with the approved sediment control plans for individual lot development projects.

3) The Public Works Director and Development Services Director have the authority to issue stop work orders to any person, firm, or corporation performing work where

Attachment: 2020 Design, Construction, and Materials Specification Handbook (1575 : Design, Construction, and Materials Specification

sediment and erosion control measures are not provided in accordance with the approved site development plans. (Ord.25-14. Passed 4-14-14)

201.07 Special Storm Sewer Rules

1. **PERMIT; FEE**. No connection shall be made to a public storm sewer within the City until the written permission of the Public Works Director or his designee has been obtained by the person, firm, or corporation proposing to or employed to perform the work. An application for a permit shall be signed by the owner or agent of the property for which the connection is desired and by the person, firm, or corporation employed to perform the work; shall describe the property and state the purpose for which the connection is desired; and shall be accompanied by a fee in accordance with the following schedule:

• Existing residential structure sump pump drain pipe	$10.00
• Existing residential structure roof downspout	$10.00
• Existing residential structure yard drain pipe (6-inch diameter or less)	$10.00
• Existing residential structure storm sewer pipe (up to 12-inch diameter)	$25.00
• All other connections	$125.00

No permit shall be issued until the appropriate application is made and the applicable fee is paid.

2. **DISCHARGES INTO STORM SEWERS REGULATED**. Stormwater and all other unpolluted drainage shall be discharged to such sewers as are specifically designated as storm sewers, or to a natural outlet approved by the Public Works Director. Industrial cooling water or unpolluted process waters may be discharged, upon approval of the Public Works Director, to a storm sewer or natural outlet after obtaining the appropriate permits from the State, Environmental Protection Agency, or any other required agencies.

3. **PROHIBITION OF ILLEGAL DISCHARGES**. No person, firm, or corporation shall discharge or cause to be discharged into a public storm sewer or watercourse any substance other than stormwater, except as follows:

   a) Water line flushing or other potable water discharges, irrigation or lawn watering, diverted stream flows, rising groundwater, uncontaminated groundwater infiltration, uncontaminated pumped groundwater, foundation or footing drains, water from crawl space pumps, air conditioning condensation, springs, individual residential vehicle washing, natural riparian habitat or wetland flows, dechlorinated swimming pool

Attachment: 2020 Design, Construction, and Materials Specification Handbook (1575 : Design, Construction, and Materials Specification

discharges, water from firefighting activities, and any other water source not containing pollutants that are not otherwise identified by the Ohio EPA as a prohibited non-stormwater discharge source.

b) Discharges specified in writing by the Public Works Director or his designee as being necessary to protect public health and safety.

c) Any non-stormwater discharge permitted under an NPDES permit, waiver, or waste discharge order issued to the discharger and administered under the authority of the Federal Environmental Protection Agency, provided that the discharge is in full compliance with all requirements of the permit, waiver, or order and other applicable laws and regulations.

4. **PROHIBITION OF CERTAIN CONNECTIONS**. The construction, use, maintenance, or continued existence of any drain or conveyance, whether on the surface or subsurface, which allows a prohibited substance to enter a public storm sewer or watercourse is prohibited. This prohibition expressly includes, without limitation, connections made in the past, regardless of whether the connection was permissible under law or practices applicable or prevailing at the time of connection. When a prohibited connection is discovered, the Public Works Director will provide written notice to the property owner ordering its disconnection from the storm sewer system or watercourse. No person, firm, or corporation shall fail to eliminate such connection(s) to the storm sewer or watercourse within thirty days after being ordered to do so as provided herein.

5. **INSPECTION OF STORM SEWERS**. After a connection to a public storm sewer is built, and before it is covered, it shall be inspected and approved by the Public Works Director or his designee.

6. **PROHIBITION OF CURB LINE DISCHARGES**. No roof downspout, sump drain, or other surface or groundwater drainage line may be constructed to discharge directly into the curb line of any public street. This prohibition expressly includes, without limitation, any curb line discharge established in the past, regardless of whether its construction was permissible under law or practices applicable or prevailing at the time. When such a curb line discharge is discovered, the Public Works Director will provide written notice to the property owner ordering its disconnection from the curb line. No person, firm, or corporation shall fail to eliminate such curb line discharge(s) within 30 days after being ordered to do so as provided herein.

Attachment: 2020 Design, Construction, and Materials Specification Handbook (1575 : Design, Construction, and Materials Specification

7. **EROSION AND SEDIMENT CONTROL**. To minimize the entry of sediment and other pollutants into the City's storm sewer system that is caused by construction site runoff, erosion and sediment control measures must be provided on all new development and redevelopment projects. These measures are to be shown in a sedimentation plan that has been prepared in accordance with the applicable requirements of the subdivision rules and regulations. Construction activities disturbing 1 or more acres of total land, or that will disturb less than 1 acre of land but are a part of a larger common plan of development, redevelopment, or sale that will ultimately disturb 1 or more acres of land, shall seek coverage under the Ohio EPA General Construction Permit for stormwater discharges (Ohio EPA permit no. OHC000005 or latest edition). As such, any person seeking approval of a Plan for erosion and sediment control measures, shall submit to the City Public Works Director prior to start of construction, a copy of the "Notice of Intent" that seeks coverage under the State of Ohio Construction Permit that has been or will be filed with that state agency.

8. **STORMWATER MANAGEMENT CONTROLS**

   a) To minimize the impact of land development and redevelopment activities on storm runoff and drainage, stormwater management controls shall be required on new development and redevelopment sites, pursuant to requirements contained in Chapter 1182, 1117.07, and per the design requirements contained in The City Design, Construction and Material Specifications document, or any subsequent supplements to this document.

   b) Construction activities disturbing one or more acres of total land, or that will disturb less than one acre of land but are a part of a larger common plan of development, redevelopment or sale that will ultimately disturb one or more acres of land, shall seek coverage under the Ohio EPA General Construction Permit for stormwater discharges (Ohio EPA permit no. OHC000005 or latest edition). As part of that compliance, Post-Construction Best Management Practices shall be made part of the stormwater management controls on land development sites, pursuant to the requirements of the Ohio EPA permit and per the requirements in Chapter 1182.

9. **MAINTENANCE RESPONSIBILITY FOR DETENTION/RETENTION BASINS**

   a) **Commercial, industrial, multi-family residential property**. The property owner(s) shall fully maintain detention/retention basins located on private commercial, industrial, or multi-family residential property, whether such basins are located within a public easement or not. This maintenance responsibility shall include both routine maintenance such as mowing, cleaning, debris removal, and erosion repair and non-routine

Attachment: 2020 Design, Construction, and Materials Specification Handbook (1575 : Design, Construction, and Materials Specification

maintenance such as the repair or replacement of damaged or missing structural components.

b) **Single family residential property**. The property owner(s) and/or homeowner's association shall be responsible for routine maintenance such as mowing, cleaning, debris removal, and erosion repair for detention/retention basins located on private single family residential property, whether such basins are located within a public easement or not. The City shall be responsible for non-routine maintenance such as the repair or replacement of damaged or missing structural components of such basins.

c) **Notification**. When the maintenance of a detention/retention basin is found to be in violation of this subsection, the Public Works Director will provide written notice to the appropriate property owner(s) and/or homeowner's association ordering that the necessary maintenance be performed within a reasonable period of time. No person, firm, or corporation shall fail to perform the required maintenance within the required period after being ordered to do so as provided herein. (Ord. 127-03. Passed 8-11-03.)

10. STORMWATER QUALITY MANAGEMENT PLAN. As a requirement of the City's NPDES Phase II Stormwater Permit, Council has adopted a "Stormwater Quality Management Plan", prepared by City staff as the City's official planning document for addressing stormwater quality and pollution prevention. All subsequent amendments to the "Stormwater Quality Management Plan" shall also be adopted by legislative action of Council. A copy of this plan is on file in the office of the Clerk of Council.

11. VIOLATION AND ENFORCEMENT COSTS. In addition to other penalties listed in this chapter, any person, firm, or corporation who violates any provision of this chapter shall be liable to the City for any expense, loss or damage resulting from the cleaning, repair or replacement work caused by the violation. Any person, firm, or corporation who violates any provision of this chapter shall also be liable for any fine or penalty incurred by the City caused by their violation. Any person, firm, or corporation who must be monitored by the City for enforcement and/or compliance shall be liable for the associated costs.

12. COMPLIANCE WITH OTHER REGULATIONS. Compliance with the provisions of this chapter or other sections of City Code does not relieve the site owner from obtaining all other necessary permits and/or approvals from federal, state, and/or county agencies. If requirements vary, the most stringent requirement shall apply. (Ord. 127-03. Passed 8-11-03.)(Ord. 25-14. Passed 4-14-14)

Attachment: 2020 Design, Construction, and Materials Specification Handbook (1575 : Design, Construction, and Materials Specification

201.08 Drainage Maintenance and Abatement Procedure

1. ROUTINE AND REMEDIAL MAINTENANCE

a) Owners of properties with stormwater Best Management Practices (BMPs) are responsible for operation and maintenance as specified in Section 906.03. The Public Works Director shall provide for inspection and routine maintenance of facilities that have been accepted for maintenance by the City. City maintenance may include stormwater conveyance-related structure cleaning and repair.

b) The Public Works Director, in the Public Works Director's sole discretion, may provide for remedial maintenance of facilities based upon the severity of stormwater problems and potential hazard to the public health and safety, through the abatement procedures described in Section 906.02. For purposes of this Chapter, maintenance associated with retention/detention basins including, but not limited to, mowing, rivulet repair, basin bottom fill, seeding, fertilizing, and/or algae removal, are not considered "potentially hazardous" to the public nor "severe" stormwater problems, and maintenance will not be provided by the City except in case of public emergency as determined by the Public Works Director.

2. ABATEMENT PROCEDURES

a) Notice To Correct Improper Drainage

1) Whenever the City shall find that (1) a tract of land not maintained by the City is inadequately drained, or (2) there is excessive erosion or sedimentation upon such land, or (3) there is an obstruction to a culvert or watercourse upon such land that interferes with water naturally flowing therein, or (4) that such culvert, storm sewer, or watercourse upon such land is of insufficient capacity to reasonably accommodate the flow of water, as required by the City, the City shall notify the owner or person having possession, charge, or management of such land to remove the obstruction, provide adequate drainage, fill or drain such land, enlarge the culverts, drains, or watercourses, mitigate excessive erosion or sedimentation, and/or accomplish any other act determined by the Public Works Director necessary to be necessary to further the purposes of this chapter. Such notice shall be served on such persons or entity in the same manner as provided by the Ohio Rules of Civil Procedure for service of Summons and the Public Works Director or his designee may post a Notice at the property. The address utilized for any service shall be the property address itself and the tax billing address for such premises as maintained on the records of the Butler County Auditor.

Attachment: 2020 Design, Construction, and Materials Specification Handbook (1575 : Design, Construction, and Materials Specification

2) The owner must comply with the City's orders within a reasonable time not to exceed 30 days, unless an extension is granted by the Public Works Director for good cause shown. Failure to comply with such order shall constitute an unlawful act. Each additional day thereafter during which the owner fails to carry out the order of the City shall constitute a separate offense.

3) In any case where a condition described above exists for more than 30 days after service of notice, the Public Works Director or his designee may issue an order to the property owner(s) stating that they are in violation; that the City may affect the necessary repairs per section 906.02 (b) or that the City may file criminal charges, or both.

4) In the event an owner fails or refuses to comply with the Public Works Director's directive, the City may provide the performance of the required work and charge the owner the abatement costs.

5) Each and every owner of real property in the City consents to the entry upon any real property in the City for all reasonable times during normal business hours for the purpose of inspection, repair or maintenance required by this chapter.

6) Failure of the City to observe or recognize hazardous or unsightly conditions or to recommend denial of a permit/zoning change shall not relieve the owner or person having possession, charge, or management of such land from the responsibility for the condition or damage resulting therefrom, and shall not result in the City, its officers or agents from being responsible for any condition or damage resulting therefrom.

7) Nothing in this chapter shall be construed as authorizing any person to maintain a private or public nuisance on his property, and compliance with the provisions of this chapter shall not be a defense in any action to abate such nuisance.

8) Nothing in this chapter shall be construed to prevent immediate action by the City in emergency situations. In case of an emergency, the City may direct that action be taken immediately to correct the condition or abate the activity to protect the public health, safety, and welfare. The City may perform the required work and charge the owner the abatement costs.

Attachment: 2020 Design, Construction, and Materials Specification Handbook (1575 : Design, Construction, and Materials Specification

b) Abatement Costs

1) If the owner or occupant having the care of the lands mentioned in Section 906.01 fails to comply with the notice provided in for Section 906.02 (A), the City shall cause such abatement procedures to be implemented. The cost for such abatement procedures shall be immediately due and payable to the City, provided, however, that an administrative fee shall be charged in the amount of five hundred dollars. The cost of the administrative fee together with the cost of the abatement procedure together with any legal fees incurred by the City shall be assessed against the owner and, if unpaid, against the lot or land together with interest thereon at the then judgment rate in effect in the State of Ohio.

2) Notice of such assessment shall be given to the owner of the lot or land charged therewith and the occupant by mailing such notice to the address utilized by the County Treasurer for billing purposes and by posting a notice of assessment at the subject premises. Service may also be made in any manner provided for service of summons by the Ohio Rules of Civil Procedure. All assessments not paid within ten days after such mailing and posting, after approval by Council, shall be certified by the Clerk of Council to the County Auditor to be placed on the tax duplicate and collected as other taxes are collected.

3. POST CONSTRUCTION STORMWATER BEST MANAGEMENT PRACTICE OPERATION AND MAINTENANCE

a) Operation and Maintenance Plan

1) The developer/property owner shall prepare an Operation and Maintenance Plan meeting the minimum requirements of the latest version of the Ohio EPA NPDES Construction Stormwater Permit for redevelopment and new development projects wherein construction activities will result in the disturbance of one or more acres.

2) The Operation and Maintenance Plan shall be submitted by the developer/property owner to City of Fairfield for review and approval prior to the City issuing the building permit.

3) The Operation and Maintenance Plan must be a stand-alone document containing the following:

Attachment: 2020 Design, Construction, and Materials Specification Handbook (1575 : Design, Construction, and Materials Specification

i. Designate the entity associated with providing the Best Management Practices (BMPs) inspection and maintenance.

ii. Indicate routine and non-routine maintenance tasks to be undertaken.

iii. Indicate a schedule for inspection and maintenance tasks.

iv. Provide proof of any necessary legally binding maintenance easements and agreements that are necessary to properly inspect and maintain the BMP(s).

v. Provide a map showing the location of the BMP(s) that are indicated on the City of Fairfield approved Stormwater Pollution Prevention Plan (SWPPP) and necessary access and maintenance easements.

vi. Provide detailed BMP drawings and inspection and maintenance procedures.

viii. Ensure that the collected pollutants resulting from BMP maintenance activities are disposed of in accordance with local, state and federal guidelines.

b) Declaration of Covenants and Restrictions

A Declaration of Covenants and Restrictions shall be made between the Owner and the City of Fairfield ensuring that the BMP(s) shall be properly inspected and maintained and shall be included within the Operation and Maintenance Plan.

c) Inspection

1) Personnel identified within the Operation and Maintenance Plan shall inspect the BMP(s) to ensure proper functionality and determine if maintenance is necessary.

2) At a minimum, inspections are to be conducted on an annual basis, or as specified in the Operation and Maintenance Plan.

3) Written inspection reports summarizing the BMP(s) inspection observations and maintenance requirements are to be submitted to the City of Fairfield upon request by the City.

d) Maintenance

1) All BMPs are to be maintained according to the measures outlined within the Operation and Maintenance Plan.

2) Ensure that the collected pollutants resulting from BMP maintenance activities are disposed of in accordance with local, state and federal guidelines.

3) The Owner shall make necessary repairs within fourteen days of their discovery as identified within the inspection reports or through a request from the City of Fairfield resulting from City conducted inspections.

4) Maintenance activities performed are to be documented on a written report and submitted to the City of Fairfield upon request.

5) In addition to any applicable provisions of Sections 906.01and 906.02, the Owner shall grant permission to the City of Fairfield to enter the property and inspect the BMP(s) whenever the City deems necessary. In an event of any default or failure by the Owner in properly maintaining the BMP(s) in accordance with the approved Operation and Maintenance Plan, or, in the event of an emergency as determined by the City of Fairfield, it is the sole discretion of the City, after providing reasonable notice to the Owner, to enter the property and take whatever steps necessary to correct deficiencies and to charge the cost of such repairs to the Owner. Nothing herein shall obligate the City to maintain the BMP(s).

4. PENALTY

a) Any person or entity having been determined to violate this chapter or who enters a plea to a violation thereof shall be guilty of a third-degree misdemeanor. Each and every day during which such violation continues shall constitute a separate offense.

b) The imposition of any fine or penalty pursuant to this chapter shall not preclude the Law Director from instituting any appropriate legal proceeding in a Court of proper jurisdiction to correct or abate a violation, require compliance with this chapter or other applicable chapters, ordinances, regulations or rules of the City or State of Ohio as determined to be appropriate by such Law Director. (Ord.25-14. Passed 4-14-14)

Attachment: 2020 Design, Construction, and Materials Specification Handbook (1575 : Design, Construction, and Materials Specification

201.09 Run-off Coefficients

- **Use Table 201-C**

201.10 Declaration of Covenants and Restrictions

- **Use Attachment 201-D**

201.11 Watercourse Protection

Every person owning or operating property through which a watercourse passes shall keep and maintain that part of the watercourse within the legal boundaries of the property and areas adjacent to the watercourse within such person's direct control, free of trash, debris, excessive vegetation, and other obstacles that would pollute, contaminate, or significantly hinder the flow of water through the watercourse. In addition, the owner, operator, or other person in control of the premises, shall maintain existing privately owned (permanent or temporary) structures, buildings, and improvements within or adjacent to a watercourse, so that such structures, buildings, or improvements will not become a hazard to the use, function, or physical integrity of the watercourse.

201.12 Notification of Spills

a) Notwithstanding other requirements of law, as soon as any person responsible for a facility or operation, or responsible for emergency response for a facility or operation has information of any known or suspected release of materials which are resulting or may result in illegal discharges or pollutants discharging into stormwater, the storm drainage system, or waters of the State, said person shall take all necessary steps to ensure the discovery, containment, and cleanup of such release to protect the health, safety and welfare of the public and to mitigate any damage to the environment and the storm sewer system.

b) In the event of such a release of hazardous materials, said person shall immediately notify emergency response agencies of the occurrence via emergency dispatch services (911) and the authorized enforcement agency. Emergency response agencies shall include without limitation, the City of Fairfield Fire Department, the City of Fairfield Public Works Department, Butler County Emergency Management Agency, and the Ohio Environmental Protection Agency. Such notification in no way alleviates other federal, state, or local reporting obligations imposed by law.

c) In the event of a release of non-hazardous materials, said person shall notify the authorized enforcement agency in person or by telephone or by email no later than the next business day after the date of said incident. Notifications in person or by phone shall be confirmed by written notice from the person responsible for such known or suspected release addressed and mailed to the authorized enforcement agency within three business days of the initial

Attachment: 2020 Design, Construction, and Materials Specification Handbook (1575 : Design, Construction, and Materials Specification

verbal notice.

d) If the discharge of prohibited materials emanates from a commercial or industrial establishment, the owner or operator of such establishment shall also retain an on-site written record of the discharge and the actions taken to prevent its recurrence.

Attachment: 2020 Design, Construction, and Materials Specification Handbook (1575 : Design, Construction, and Materials Specification

TABLE 201-C

Run-off Coefficients **Use Weighted Average**

TYPE OF AREA	RUN-OFF COEFFICIENT
Business	0.60 - 0.75
Residential - Single Family	0.40 - 0.50
Residential - Multi-Family	0.60 - 0.75
Industrial – Light	0.60 - 0.80
Industrial – Heavy	0.70 - 0.90
Parks, Cemeteries	0.25 - 0.40
Playgrounds	0.35 - 0.45
Railroad Yard	0.30 - 0.40
Woodland	0.20 - 0.40
Grassland	0.25 - 0.45
Cropland	0.40 - 0.50
Pavement	0.95
Roofs	0.90
Lawns, Flat, 0-2%	0.20 - 0.25
Lawns, Average, 2%-6%	0.25 - 0.35
Lawns, Steep, over 6%	0.35 - 0.40

Attachment: 2020 Design, Construction, and Materials Specification Handbook (1575 : Design, Construction, and Materials Specification

DECLARATION OF COVENANTS AND RESTRICTIONS

This Declaration of Covenants and Restrictions (this "Declaration") is made on this ___ day of _____, 20__ by _____, an Ohio _____ (the "Declarant").

Recitals:

A. Declarant owns certain property located in the City of Fairfield, Ohio as more particularly described on the legal description attached hereto as Exhibit A and incorporated herein by reference (the "Property").

B. The Property is subject to Ohio EPA Permit No. OHCO00005, dated April 23, 2018, (hereinafter referred to as the "General Permit"), which General Permit requires Declarant to submit a post-construction operation and maintenance plan for stormwater facilities and practices, and further requires implementation of the plan be ensured through recording of a legally binding easement, agreement and/or other document.

C. In accordance with the General Permit, Declarant hereby agrees to restrict the use of the Property as set forth in this Declaration, with the intent that such covenants and restrictions run with the land.

NOW, THEREFORE, for valuable consideration, the receipt and sufficiency of which are hereby acknowledged, Declarant, for itself and its successors and assigns as owners of the Property, hereby agrees as follows:

§1. Covenants and Restrictions. Declarant hereby agrees, for itself and its successors and assigns as owners of the Property, that the Property shall be subject to the following covenants and restrictions:

1. Declarant has submitted, and the City of Fairfield has approved, a post-construction operation and maintenance for stormwater facilities and practices (hereinafter referred to as the "Maintenance Plan"), a copy of which Maintenance Plan is attached hereto as Exhibit B and incorporated herein by reference. Declarant covenants that the owner of the Property shall be the designated entity for the stormwater inspection and maintenance responsibilities set forth in the Maintenance Plan. The owner accordingly shall undertake any routine and/or non-routine inspection and maintenance tasks set forth in the Maintenance Plan in accordance with the schedule set forth in the Maintenance Plan.

2. Declarant hereby acknowledges that these covenants and restrictions run with the land and the declarant will note on the individual property deed that the subject parcel(s) have stormwater management responsibilities as designated on the plat.

Attachment: 2020 Design, Construction, and Materials Specification Handbook (1575 : Design, Construction, and Materials Specification

Specific stormwater management responsibilities for this subdivision are as follows_____
_____
_____.

3. Declarant hereby acknowledges and agrees that neither the City of Fairfield nor the Ohio Environmental Protection Agency is or shall be responsible for the inspection and maintenance tasks set forth in the Maintenance Plan.

§2. Perpetual Restrictions. The covenants and restrictions set forth in this Declaration shall be perpetual and shall run with the land for the benefit of, and shall be enforceable by the City of Fairfield. This Declaration and the covenants and restrictions set forth herein shall not be amended, released, extinguished or otherwise modified without the prior written consent of the City of Fairfield, which consent may be withheld in its sole and absolute discretion.

§3. Enforcement. If Declarant, or its successors or assigns as owner of the Property, should fail to observe the covenants and restrictions set forth herein, the City of Fairfield shall have the right to enforce, by any proceedings at law or in equity, all restrictions, conditions and covenants set forth herein. Failure by the City of Fairfield to proceed with such enforcement shall in no event be deemed a waiver of the right to enforce at a later date the original violation or a subsequent violation.

§4. Severability. Each provision of this Declaration and the application thereof to the Property are hereby declared to be independent of and severable from the remainder of this Declaration. If any provision contained herein shall be held to be invalid or to be unenforceable or not to run with the land, such holding shall not affect the validity or enforceability of the remainder of this Declaration.

§5. Notices. Notices or other communication hereunder shall be in writing and shall be sent certified or registered mail, return receipt requested, or by other national overnight courier company, or personal delivery. Notice shall be deemed given upon receipt or refusal to accept such delivery. Each party may change from time to time their respective address for notice hereunder by like notice to the other party. The notice addresses of the parties are as follows:

Declarant:

City : City of Fairfield
[address - line 1]
[address - line 2]
ATTN: [City responsible person]

Attachment: 2020 Design, Construction, and Materials Specification Handbook (1575 : Design, Construction, and Materials Specification

§7. Governing Law. This Declaration shall be governed by, and construed in accordance with the law of the State of Ohio.

IN WITNESS WHEREOF, the Declarant has caused this Declaration of Covenants and Restrictions to be executed this ___ day of _____, 20__.

DECLARANT:

_____

By: _____
Name: _____
Title: _____

STATE OF OHIO)
) SS
COUNTY OF)

The foregoing instrument was acknowledged before me this ___ day of _____, 20__, by _____, the _____ of _____, a _____, on behalf of the _____.

_____
Notary Public

This instrument was prepared by:

_____
_____

Attachment: 2020 Design, Construction, and Materials Specification Handbook (1575 : Design, Construction, and Materials Specification

202.00 STORM SEWER

202.01 Pipe Size

- (Manning's Formula) $Q = A \left(\frac{1.486}{n} \times R^{2/3} \times S^{1/2} \right)$

202.02 Values of "n"

- Refer to section 1104.4.5, and Figure 1105-2 of the current ODOT, Location and Design Manual, Volume 2, Drainage Design.

202.03 Minimum Size

- 12 inches

202.04 Minimum Cover

- 2 feet to top of pipe or as recommended by the manufacturer.

202.05 Minimum Mean Velocity

- 3.0 feet per second

202.06 Maximum Mean Velocity

- 14.0 feet per second for Corrugated Metal Pipe
- 20.0 feet per second for Plastic and Concrete Pipe.

202.07 Maximum Manhole Spacing

- 400 feet (36" and under)

202.08 Manhole Placement

- Intersections, termini of sewers, changes in size and/or slope, changes in alignment (36 inches and under), places where inlet leads are to be connected.

- Drop manholes are required at stream entrances for storm sewer outfalls if the difference between stream and pipe inverts is greater than 12 inches. The manhole outlet pipe shall be directed with the flow of the stream.

202.09 Maximum Inlet Spacing (each side of street)

- Flat (0.3% - 1.0%) 150' - 250' (normal conditions)
- Normal (1.0% - 5.0%) 250' (normal conditions)
- Steep (5% & greater) 150' - 250' (normal conditions)

- Spacing shall be governed by a 2 inch allowable depth of gutter flow based upon a 10 minute time of concentration and a 10 year design storm if it would be less than the above spacing.

- All low spots, where the street grade changes to a flatter slope, dead end of descending streets, at P.C. or P.T. of all intersection radius curves where the curb and gutter grade

Attachment: 2020 Design, Construction, and Materials Specification Handbook (1575 : Design, Construction, and Materials Specification

descends toward radius curve, (locate on property line extended or at mid-lot).
Vane grates will be required for all street grades in excess of 2 percent.

See the Modified Type 3 and Type 3A Catch Basins drawing on Page 1 of the Standard Construction Drawings.

202.10 Outlet Protection

- 3 fps or less — No protection required
- 3 fps to 5 fps — Sodded ditch
- 5 fps to 18 fps — Rock channel protection
  (If the mean velocity is between 5 fps and 18 fps, dumped rock channel protection will be as per Figure 1107-1 of the current ODOT Location and Design Manual, Volume 2.)
- greater than 18 fps — Special outlet protection

202.11 Steep Slope Protection

- Sewers of a 15% slope or greater shall be anchored with concrete anchors spaced as follows:
  - Grades from 15% to 35% shall be anchored on 36 feet center to center.
  - Grades from 35% to 50% shall be anchored on 24 feet center to center.
  - Grades from 50% and over shall be anchored on 16 feet center to center.

202.12 Headwalls

- Headwalls or end sections will be per ODOT specifications. Full height headwalls will be required in rear and side yard areas.

203.00 CHANNEL DESIGN

203.01 Pipe Size

- (Manning's Formula) $Q = A \left(\frac{1.486}{n} \times R^{2/3} \times S^{1/2} \right)$

203.02 Values of "n"

- Rock Lined Channels — 0.08
- Grassed Channels — 0.03
- Concrete/Asphalt Lining — 0.015

203.03 Side Slopes (grass)

- Desired — 4:1
- Maximum — 3:1

Attachment: 2020 Design, Construction, and Materials Specification Handbook (1575 : Design, Construction, and Materials Specification

203.04 Minimum Freeboard

- 1 foot

203.05 Minimum Grade

- Grass 1.0 %
- Concrete 0.35 %

- The minimum grade for all ditches shall be 1 percent except for streams, large channels with a paved bottom, and slopes paved to a height approved by the City Engineer. (Ord.167-95. Passed 11-13-95)

203.06 Channel Protection

- Seeding 0% - 2%
- Sodding 2% - 5%
- Lining > 5% and at all channel curves and at junctions with other channels.

- Where possible, natural streams, including growth along the banks, shall not be disturbed. Roughness coefficients and increased peak flows and velocities shall be evaluated to determine stability. (Ord.167-95. Passed 11-13-95)

203.07 Policy

- **Open Ditches**
  Open ditches will be avoided wherever possible in a subdivision. Where pipe sizes are larger than 60 inches, the requirements for storm sewer pipes may be waived in favor of ditches.

- **Roof Down Spouts, Sump Pumps, and Footing Drains**
  Sump pumps are not permitted to be discharged into the sanitary sewer or the curb and gutter adjacent to the roadway. All subdivisions, unless waived by the Public Works Director or his/her Designee, shall provide satisfactory drainage facilities for the disposal of water generated by sump pumps and footing drains. Sumps and footing drains shall be directed to a storm sewer system, ditch or swale built as part of the drainage plan. Roof down spout pipes are not permitted to be discharged into the curb and gutter adjacent to the roadway. New development and redevelopment will require that all down spouts are connected to an underground drainage system whenever feasible. Down spouts, sump drains, and footing drains shall not be constructed to negatively impact neighboring properties.

Attachment: 2020 Design, Construction, and Materials Specification Handbook (1575 : Design, Construction, and Materials Specification

204.00 CONSTRUCTION REQUIREMENTS AND MATERIALS SPECIFICATIONS

204.01 Trench Excavation

a) Item 611 of the current State of Ohio Department of Transportation Construction and Material Specifications and the following shall apply:

1) Open road cuts require an Open Road Cut permit approved by the Public Works Director or his/her Designee. Roadway restoration shall be per Public Works standard drawings for typical restoration sections. Trenches not backfilled and resurfaced by the end of the work day shall be plated in accordance to standard drawing. Steel plates shall be accompanied by appropriate signage warning motorists of the plates in the roadway, the plates must be secured and wedged in a manner acceptable to the Public Works Department, and plates are not to be used between November 1 and April 1 except for emergency circumstances. Plates used between November 1 and April 1 must be recessed for all locations.

2) Open no more trench in advance of pipe laying than is necessary to expedite the work.

3) Trench excavation will be performed according to OSHA and any State of Ohio regulations.

4) In existing street rights-of-way, a Right-of-Way Permit must be obtained from the Public Works Director or his/her Designee to lay back slopes in the public right-of-way.

See the Trench Detail and Full Depth Asphalt Concrete Pavement drawings on Pages 3 and 10, respectively, of the Standard Construction Drawings.

204.02 Pipe Bedding

Item 611.02 and 611.06 of the current State of Ohio Department of Transportation Construction and Material Specifications will apply.

204.03 Pipe Laying

a) Item 611.05 of the current State of Ohio Department of Transportation Construction and Material Specifications and the following will apply:

1) Grade stakes shall be required prior to laying any pipe. Line and grade will be controlled by laser alignment. Pipe will be protected during handling against impact

shocks and free fall. Do not permit hooks to come in contact with pre-molded joint surfaces. Handle pipe having pre-molded joint rings or attached couplings so that no weight, including the weight of the pipe itself, will bear on or be supported by the jointing material. Take care to avoid dragging the spigot ring on the ground or allowing it to be damaged by contact with gravel, crushed stone, or other hard objects. After delivery alongside the trench, carefully examine each piece of pipe for roundness and specification compliance. Acceptable pipe may be marked with paint or other permanent marking material so that the marks are plainly visible after installation in the trench and before the pipe is covered.

2) A mandrel test will be required for Item 707 plastic and polyethylene type pipe to determine the pipe deflection prior to acceptance of the storm sewer by the City of Fairfield. When the development/subdivision has completed the one year maintenance period, the plastic and polyethylene pipe may be videotaped with a copy of the recording supplied to the City of Fairfield in lieu of a mandrel test; only with the permission of the Public Works Director. The maximum allowable pipe deflection is 5 percent.

204.04 Joints

a) Item 611.08 of the current State of Ohio Department of Transportation Construction and Material Specifications and the following shall apply:

1) In all jointing operations, the trench shall be dry.

204.05 Backfilling Trenches

a) Item 611.06 of the current State of Ohio Department of Transportation Construction and Material Specifications and the following shall apply:

1) Unless other protection work is directed, backfill trenches immediately after the pipe is laid. In the case of concrete cradle bedding, delay backfilling until the concrete has set sufficiently to support the backfill load. Except for unusual circumstances such as sub-aqueous installations, permit no water to rise in non-backfilled trenches after the pipe is in place. Backfill material to be placed above pipe bedding shall be free of brush, debris and junk. Backfill under existing paved roadways will be flowable fill per ODOT item 613 unless waived by the Director of Public Works.

See the Trench Plate Detail and Trench Detail drawings on Pages 2 and 3, respectively, of the Standard Construction Drawings.

Attachment: 2020 Design, Construction, and Materials Specification Handbook (1575 : Design, Construction, and Materials Specification

2) Unless specifically authorized, place no rock or rock excavation material in the upper 18 inches of the trench. Place no rock or stones having a dimension larger than 4 inches within 3 feet of the top of the pipe. Large stones may be placed in the remainder of the trench as backfill only if well separated and arranged so that no backfill settlement will result. Use puddling, jetting, or water flooding for consolidating backfill material only when approved by the Public Works Director or his/her Designee.

204.06 Pipe Material Specification for Storm Sewer

a) Items 611, 706 and 707 of the current State of Ohio Department of Transportation Construction and Material Specifications shall apply.

b) All pipes that cross under road pavement/curbs shall be reinforced concrete pipe. The class of pipe shall be determined by a design engineer.

c) **Corrugated/Smooth Metal Pipe**. All corrugated/smooth metal pipes shall be aluminized type 2 coated, welded, seam pipe conforming to ODOT specifications unless approved by the Public Works Director.

204.07 Manholes, Catch Basins, & Structures

a) See Item 611 of the current State of Ohio Department of Transportation Construction and Material Specifications.

b) Catch basins, trench drains, and other storm structures shall not be placed within or immediately adjacent to dumpster pads/dumpster enclosures.

204.08 Drywells

a) Drywells will not be approved within the City of Fairfield without supporting calculations provided by a licensed professional engineer based on a permeability test performed by a licensed geotechnical engineer.

See the Standard Pre-Cast Concrete Drywell drawing on Page 4 of the Standard Construction Drawings.

b) If drywells are to be used for stormwater drainage control or stormwater detention/retention in any new subdivision or dedication of public improvements, the developer shall be required to execute an agreement with the City of Fairfield satisfactory to the Law Director prior to recording of the plat or dedication, which provides a warranty by the developer of the proper and efficient operation of all

Attachment: 2020 Design, Construction, and Materials Specification Handbook (1575 : Design, Construction, and Materials Specification

stormwater drainage and retention/detention facilities of the subdivision in accordance with the requirements of this chapter for a period of five years after the recording of the plat or dedication. The agreement shall require the developer to take any and all corrective action, including, but not limited to, the installation of new or additional facilities in order for the subdivision or improvements to meet the requirements of this chapter. The developer's performance of the agreement shall be secured by an appropriate performance bond or other security approved by the Law Director.
(Ord. 214-98. Passed 12-7-98.)

Attachment: 2020 Design, Construction, and Materials Specification Handbook (1575 : Design, Construction, and Materials Specification

ROADWAY – SECTION 300

Attachment: 2020 Design, Construction, and Materials Specification Handbook (1575 : Design, Construction, and Materials Specification

SECTION 300

ROADWAY

INTRODUCTION

The latest published edition of the following documents shall be the accepted standard for materials and/or procedures for the construction, modification, alteration, or expansion of the City of Fairfield's roadway infrastructure:

1. ***City of Fairfield Design, Construction, and Materials Specification Handbook***
2. ***City of Fairfield Codified Ordinances***
3. ***City of Fairfield Thoroughfare Plan***
4. ***City of Fairfield Comprehensive Plan***
5. ***Ohio Manual of Uniform Traffic Control Devices (OMUTCD)***
6. ***Ohio Department of Transportation Location and Design Manual Volume 1 Roadway Design (ODOT L&D)***
7. ***Ohio Department of Transportation Construction and Materials Specification (ODOT CMS)***
8. ***Ohio Department of Transportation Construction Administration Manual of Procedures (ODOT MOP)***
9. ***Ohio Department of Transportation State Highway Access Management Manual***
10. ***Ohio Department of Transportation Pavement Design Manual***
11. ***Ohio Department of Natural Resources Rainwater and Land Development Manual***
12. ***American Association of State Highway and Transportation Officials "A Policy on Geometric Design of Highways and Streets" (AASHTO)***
13. ***Ohio Department of Transportation Traffic Engineering Manual (ODOT TEM)***
14. ***Transportation Research Board Highway Capacity Manual***
15. ***Institute of Transportation Engineers Traffic Engineering Handbook***
16. ***Ohio EPA Laws and regulations (OEPA)***

If a conflict exists between reference sources, the more restrictive requirement shall prevail. The Public Works Director shall provide interpretation as requested.

Plan approval by the City of Fairfield does not imply nor assure approval by any other governing jurisdiction. Plans are approved subject to the conditions of compliance with all applicable laws, rules, regulations, and standards. The proposed project may be constructed only in accordance with the approved plans. There may be no deviation from the approved plans without the written approval of the City. Approval of the plans does not constitute an assurance that the proposed project will operate in compliance with all Ohio laws and regulations. Plans should also note "All work within the right of way within City limits will require a permit from Public Works". Permits can be found at https://www.fairfield-city.org/448/Permits-Specifications

Attachment: 2020 Design, Construction, and Materials Specification Handbook (1575 : Design, Construction, and Materials Specification

301.00 DESIGN INTERSECTIONS

a) At street and alley intersections, property line corners shall be rounded by an arc, the minimum radius of which shall be 15 feet and 10 feet respectively. In business districts, a chord may be substituted for such arcs.

b) Street curb intersections shall be rounded by radii of at 25 feet.

c) The above minimum radii shall be increased when the smallest angle of intersection is less than 90 degrees. (Ord.141-83. Passed 9-26-83)

302.00 MINIMUM PAVEMENT WIDTHS

Minimum pavement widths, back to back of curb, required to be installed at the subdivider's expense, shall be as follows:

a) Primary and secondary thoroughfares, as shown on the Thoroughfare Plan.

b) Collector streets, 38 feet.

c) Local and minor streets, 28 feet.

d) The pavement of a turning circle at the end of a cul-de-sac street will have a minimum outside diameter of 80 feet. A "T" or "Y" shaped paved space, when approved by the Commission, in place of a turning circle, will extend entirely across the width of the street right of way and will be at least 20 feet wide with the flared portion rounded by minimum radii of 20 feet.

e) Alleys, full width of right of way, 20 feet. (Ord.141-83. Passed 9-26-83)

Attachment: 2020 Design, Construction, and Materials Specification Handbook (1575 : Design, Construction, and Materials Specification

303.00 STREET DESIGN STANDARDS

	Primary & Secondary	Industrial	Collector	Local & Cul-de-sac
Minimum centerline grade	0.50%	0.50%	0.50%	0.50%
Maximum centerline grade	5.0%	5.0%	10.0%	12.0%
Minimum length of vertical curve (See Note 2)	100'	100'	50'	50'
Minimum length of tangent between horizontal curves	100'	100'	50'	50'
Minimum edge of pavement radius	40'	50'	25'	25'
Minimum stopping sight distance (See Note 3)	Refer to ODOT L&D Manual	Refer to ODOT L&D Manual	Refer to ODOT L&D Manual	Refer to ODOT L&D Manual
Maximum centerline grade approaching an intersection (See Note 4)	2.0%	2.0%	4.0%	6.0%
Cul-de-sac pavement turnaround diameter from back-to-back of curb (See Note 5)	N/A	120'	N/A	80’
Minimum traffic lane width for multi-lane streets (See Note 6)	12'	12'	12'	11.5'
Minimum Centerline Radius	Refer to ODOT L & D Manual	Refer to ODOT L & D Manual	Refer to ODOT L & D Manual	100'
Maximum driveway grade (See Note 9)	15%	15%	15%	15%

a) Any exceptions to these standards must be approved in writing by the Public Works Director.

b) All changes in street grades shall be connected by vertical curves of a minimum length in feet equivalent to 15 times the algebraic difference between the rates in grade.

c) Vertical sight distance shall be measured from an eye level of 3.5 feet to the top of a 2-foot-

Attachment: 2020 Design, Construction, and Materials Specification Handbook (1575 : Design, Construction, and Materials Specification

high object.

d) The grades shall be shown every 10 feet around the radius of intersecting streets to the point of curve or tangency for a distance of 50 feet from an intersection with the front of curb or edge of pavement of another street.

e) A "T" or "Y" shaped turnaround shall not be used unless approved by the Planning Commission and the design has been approved by the Public Works Director.

f) Minimum pavement widths as detailed in the Thoroughfare Plan for the City of Fairfield shall be used for all two lane streets except that all industrial streets shall have a minimum width of 38 feet as measured from back-to-back of the curb and all cul-de-sacs at the termini of said industrial streets shall be offset to eliminate the need for semi-trucks to negotiate an "s"-curve into and through the turning circle. Exit curves as measured along the edge of pavement within an industrial cul-de-sac shall be a minimum radius of 45 feet. Underdrains are required on all newly developed streets and shall be 6-inch perforated plastic pipe with an approved geotextile fabric wrap around the pipe and shall be installed 6 to 12 inches behind and parallel to the back of curb and approximately 3 feet below subgrade on both sides of the roadway. Under drains shall be used to drain the subgrade. The under drains shall be connected to a positive drainage outlet (i.e. curb inlets) and shall be backfilled with #8 sized granular material.

g) The minimum design speed for all projects shall be equal to or greater than the legal speed for the facility and the preferred design speed shall be 5 miles per hour higher than the posted legal speed.

h) Sump collector lines are required in all residential developments. The 8-inch sump collector line shall be located approximately 2 feet behind the curb and approximately 2 feet below grade. When used in parallel with underdrains, the sump collector line should be located above the underdrain pipe. Cleanouts on the sump collector lines will be required every 200 feet. Tie-ins to sump lines must be done using approved commercial fittings and shall be inspected by the City of Fairfield Public Works Department. A minimum of 24 hours notification is required for inspection request. The proposed sump line tie in shall be shown on the site plan. Concrete collars shall not be permitted. **See the Two-Way Clean Out (For Sanitary and Storm Applications) drawing on Page 27 of the Standard Construction Drawings.** The 8-inch sump collector line shall be PVC (SDR-35, schedule 40, or approved equal). All private sump lines connecting to the 8-inch sump collector line shall be of the same material and properly bedded within the public right-of-way. **See the Sump or Downspout Drain drawing on Page 5 of the Standard Construction Drawings.**

Attachment: 2020 Design, Construction, and Materials Specification Handbook (1575 : Design, Construction, and Materials Specification

i) All residential and commercial driveways which are new construction will be reviewed on a case by case basis. For any design questions regarding these driveways not described in Sections 304.04 or 308.00, the City of Fairfield Public Works and Fire Departments shall make the final determination involving a workable driveway design. Driveways shall not be constructed or widened to within 5 feet of a utility pole, fire hydrant, catch basin, etc. Driveway flares shall not project across the neighboring property line

j) Curb ramps shall be installed according to the most recent ODOT standard drawings BP-7.1. Detectable warnings shall be cast in place (2'x 4') by Armor Tile, ADA Solutions, or Tuftile and match Federal Color #20109 (Dark Red in Color).

k) All newly constructed, repaired, or replaced sidewalk and/or curb ramps shall be made completely compliant with the latest edition of the American with Disabilities Act (ADA). This includes providing proper slopes and cross-slopes of all sidewalk and curb ramps and the provision of truncated dome paver warning devices at all curb ramps. Sidewalk and curb ramp cross-slopes for new construction shall be designed to no greater than 1.5%. The maximum acceptable resultant construction cross-slope is 2.0%. For longitudinal slope, the maximum grade is 5% with replacement ramps required to replace up to 15 feet of existing sidewalk in order to accommodate the ramp.

304.00 PAVEMENT STANDARDS

304.01 Rigid Pavement

The use of rigid pavement in the City is not preferred and requires prior approval and acceptance by the Public Works Director or his/her designee. Concrete pavement shall be designed and as specified by the design engineer. If approved, concrete pavement shall be a minimum 7 inches thick for residential streets and 9 inches thick for commercial streets. Curb and gutter shall not be integral to the roadway pavement. The concrete pavement design shall include a minimum 6 inches of Aggregate Base.

304.02 Flexible Pavement

a) Flexible pavement for commercial/industrial, primary, secondary, and collector streets shall consist of minimum thickness of asphalt concrete base, asphalt intermediate course, and asphalt surface course as designed and as specified by the design engineer over a uniformly compacted subgrade. Tack coat will be applied at a minimum rate of 0.1 gallon per square yard unless otherwise specified by the design engineer. The surface lift shall be installed just before the final acceptance of the subdivision.

b) A minimum design for local residential streets will be 5 inches of Asphalt Concrete Base, 1.5

Attachment: 2020 Design, Construction, and Materials Specification Handbook (1575 : Design, Construction, and Materials Specification

inches of Asphalt Concrete Intermediate Course and 1.5 inches of Asphalt Concrete Surface Course.

c) A minimum design for industrial streets will be 8 inches of Asphalt Concrete Base, 1.5 inches of Asphalt Concrete Intermediate Course and 1.5 inches of Asphalt Concrete Surface Course.

d) The City of Fairfield reserves the right to increase the pavement thickness, require underdrains or require additional subgrade preparation as typical traffic loadings are anticipated or if poor soils are encountered.

304.03 Pavement Design and Acceptance

Design of rigid and flexible pavement shall be based on traffic volumes, geotechnical investigation, and methods set forth in the current Pavement Design Manual from the State of Ohio Department of Transportation. The City will not accept maintenance responsibility for new construction of public streets constructed by a developer until 80% of the final build-out has been completed.

304.04 Driveways, Culverts, and Sidewalks

a) Concrete residential drive aprons within the public right-of-way shall be 7 inches thick. Concrete commercial drive aprons within the public right-of-way shall be 9 inches thick. Concrete sidewalk within the public right-of-way shall be 4 inches thick. Concrete sidewalk that is part of the drive/apron shall be the same thickness as the drive apron. All driveway aprons behind concrete curb must be concrete. Aprons in areas where no curb is present may be asphalt if approved by the Public Works Director or his/her designee. Asphalt aprons must be an equal or greater thickness than what is required for concrete.

b) Culverts are required under all drive aprons that do not have curb or if deemed necessary by the Public Works Director or his/her designee. Culverts shall be a minimum of 12 inches in diameter and shall be reinforced concrete pipe.

c) Proposed driveways on thoroughfares are required to have turnarounds built equal to or greater than the required dimensions of a parking stall. These turnarounds are to ensure that vehicles will be able to enter the highway without backing. **See the Item 452 – Non-Reinforced Concrete Pavement Drive Apron drawing on Page 8 of the Standard Construction Drawings.**

304.05 Road Cut Restoration / Trench Excavation (Same as 204.01)

Attachment: 2020 Design, Construction, and Materials Specification Handbook (1575 : Design, Construction, and Materials Specification

a) Open road cuts require an Open Road Cut permit approved by the Public Works Director or his/her Designee. Roadway restoration shall be per Public Works standard drawings for typical restoration sections. Trenches not backfilled and resurfaced by the end of the work day shall be plated in accordance to standard drawing. Steel plates shall be accompanied by appropriate signage warning motorists of the hazard in the roadway. The plates must be secured and wedged in a manner acceptable to the Public Works Department, and plates are not to be used between November 1 and April 1 except for emergency circumstances. Plates used between November 1 and April 1 must be recessed for all locations.

b) Low Strength Mortar (LSM) backfill is required for all trench work within 3 feet of the edge of pavement/back of curb of the public street. LSM shall be of an approved mix design and have a compressive strength of no greater than 50 psi. The mix design must be submitted to the Public Works Department for approval at least 48 hours in advance of delivery.

c) Open no more trench in advance of pipe laying than is necessary to expedite the work.

d) Trench excavation will be performed according to OSHA and any State of Ohio regulations.

e) For trenches outside the public Right-of-Way, a Right-of-Way Permit may be required from the Public Works Director or his/her Designee to lay back slopes in the public right-of-way.

f) No boring, drilling, or tunneling shall be permitted in a public roadway, or right of way, unless authorized by permit and review by the Public Works Department.

g) For pavement excavation, the Contractor shall use such methods as; drilling, chipping, or sawing to assure the breaking of pavement along straight lines. The face of the remaining pavement shall be approximately vertical. If the Contractor removes or damages pavement or surfaces beyond the limits specified, such pavement and surfaces shall be repaired or replaced at the Contractors' expense. The Public Works Department must be notified 24 hours in advance and an inspector present for any pavement restoration to be acceptable.

See the Trench Plate Detail, Trench Detail, and Full Depth Asphalt Concrete pavement drawings on Pages 2, 3, and 10, respectively, of the Standard Construction Drawings.

304.06 Cold Weather Placement of Concrete

a) ACI 306R (latest edition), published by the American Concrete Institute, shall be followed when cold weather is expected and/or encountered, as determined by the City Engineer.

Attachment: 2020 Design, Construction, and Materials Specification Handbook (1575 : Design, Construction, and Materials Specification

1) Cold weather is determined as follows:

   i. The average daily air temperature (average of the highest and lowest temperatures from midnight to midnight) is below 40 degrees Fahrenheit, and

   ii. The air temperature is not greater than 50 degrees Fahrenheit for more than one half of any 24-hour period.

b) In no case will the placement of concrete be allowed to be placed on frozen (less than 33 degrees Fahrenheit) ground or sub base.

c) Prior to allowing placing any concrete during cold weather, the Contractor shall submit a formal written cold weather placement policy/procedure to the Public Works Department.

d) Concrete shall be kept above freezing by the continuous use of blankets or other approved methods for a minimum of 7 days after being placed and finished.

305.00 WORK WITHIN THE PUBLIC RIGHT-OF-WAY

All work within the public right-of-way requires a permit to be approved by the Public Works Director or his/her designee. **See Appendix A for detailed information on work within the public right-of-way**

306.00 TRAFFIC IMPACT STUDIES

Traffic studies for new development and redevelopment within the City shall follow the procedures outlined by this document and must be approved by the City Engineer or his/her designee. **See Appendix B for detailed information on Traffic Impact Studies**

307.00 SMALL CELL DESIGN GUIDELINES

Small cell infrastructure within the public right-of-way requires a permit to be approved by the Public Works Director or his/her designee. **See Appendix C for detailed information on Small Cell Design Guidelines**

308.00 ACCESS MANAGEMENT STANDARDS AND GUIDELINES

1. PURPOSE & INTENT

a) Access Management is an efficient way of dealing with the problems associated with traffic congestion and safety caused by motorists turning at driveways and intersections. Congestion and the threat of accidents become greater as the number of driveways and

Attachment: 2020 Design, Construction, and Materials Specification Handbook (1575 : Design, Construction, and Materials Specification

intersections increase and the distance between them decreases.

b) The City of Fairfield is committed to the following principles: promoting public safety by minimizing accidents; improving the driving experience by increasing mobility and decreasing delay; providing necessary and safe access to property; and minimizing costs by making more efficient use of existing and proposed roads.

c) The City considers: (1) modifications to existing roadways to provide better access management, (2) proper access management along all new roadways, and (3) proper management and design of the site access and circulation systems associated with planned new developments.

2. DRIVEWAY TYPES

a) Farm or Field Drives: A driveway providing access to an agricultural tract of land.

b) Single Family Residential: A driveway providing access to a single-family residence.

c) Multi-Family Residential: A driveway providing access to multiple single-family residences or to multi-family dwelling units.

d) Commercial: A driveway providing access to an office, business, commercial, or institutional building or buildings, or to an industrial facility (that services fewer than ten trucks per day).

e) Industrial/Retail: A driveway serving a retail center (such as a community shopping center) or an industrial facility (that services ten or more trucks per day).

For Access Management purposes, driveways are also classified by traffic volumes as follows:

a) Low Volume Driveway (LVD): greater than 5 and up to 100 two-way vehicle trips in one or more 60-minute periods of a day

b) Medium Volume Driveway (MVD): greater than 100 and up to 200 two-way vehicle trips in one or more 60-minute periods of a day

c) High Volume Driveway (HVD): greater than 200 two-way vehicle trips in one or more 60-minute periods of a day.

Attachment: 2020 Design, Construction, and Materials Specification Handbook (1575 : Design, Construction, and Materials Specification

3. DRIVEWAY LOCATION & SPACING

a) Residential properties will be limited to one drive per lot. Driveway turnarounds will be required for residential properties on streets with a speed limit above 25 mph.

b) The number of driveways afforded any one site shall be minimized. (The need for more than one driveway must be substantiated by a Traffic Impact Study.)

c) Access for multiple properties shall be combined, where feasible.

d) Driveways shall be located in accordance with applicable sight distance requirements (Stopping Sight Distance (SSD) and Intersection Sight Distance (ISD) as contained in Section 200 of the ODOT Location and Design Manual).

e) Minimum driveway spacing (centerline to centerline), which is based on posted speed limits, shall be determined as follows:

Posted Speed (mph)	Minimum Distance (feet)
25	150
30	200
35	250
40	325
45	500
50	550
55	600

f) Driveway spacing shall consider the location of driveways on both sides of a roadway.

f) Driveways shall be located where they will not cause problems with movements to and from an existing or planned street, highway, or driveway on the opposite side of the roadway.

g) Driveways shall be located a sufficient distance from an adjacent public road intersection so as not to interfere with the traffic operations at the intersection. The following provides the minimum acceptable distances between drive locations and adjacent intersections. For all functional classifications set forth in the Thoroughfare Plan, where two roads of different functional classes intersect, the restrictions and distances of the higher-level roadway will apply along the lower classified roadway. (The defined distances are measured from the centerline of the intersecting road to the centerline of the proposed driveway).

Attachment: 2020 Design, Construction, and Materials Specification Handbook (1575 : Design, Construction, and Materials Specification

Higher Roadway Classification	Minimum Distance from Intersection
Major Arterials	600 feet
Minor Arterials, Collectors	300 feet

4. ACCESS MANAGEMENT STANDARDS

Reference the latest version of the ODOT State Highway Access Management Manual.

5. DRIVEWAY GEOMETRICS AND DESIGN

a) All drive aprons located within the public right-of-way shall be constructed of concrete or asphalt. The thickness of the concrete and aggregate base shall be consistent with the standards found in 304.04 of this manual.

b) The portion of a driveway and/or parking area located outside of the Right-of-Way shall be constructed of concrete, asphalt, pavers, or other durable and permanent material as approved by the City Engineer. New gravel driveways or parking areas or expansion of existing gravel driveways or parking areas shall not be permitted.

Driveway Design Standards

Driveway Type	Residential		Commercial		Industrial/Retail	
Design Vehicle	P		SU-30		WB-50/WB-67	
Width (ft)	Min.	Max.	Min.	Max.	Min.	Max.
One-Way	-	-	12	20	14	26
Two-Way	9	24	24	36*	26	38*
Right Turn Radius**	15	25	25	35	35	75

* The chart assumes one lane for ingress and one lane for egress. Additional lanes will increase the width requirement.
** Flares are generally preferred and when used are typically half the width of the tree lawn up to five feet maximum on either side of the drive.

P: Passenger car
SU-30: Single-unit truck; 30 feet in length
WB-50: Large semi-trailer truck; 55 feet in length
WB-67: Interstate semi-trailer truck; 74 feet in length

c) Two-way driveways shall intersect the highway at an intersection angle between 80º and 90º.

d) An angle less than 80º will not be permitted on new two-way driveways. One-way operation driveways (right in only or right out only) shall not have an angle less than 45º

Attachment: 2020 Design, Construction, and Materials Specification Handbook (1575 : Design, Construction, and Materials Specification

e) Drives shall not be obstructed within the right-of-way by gates, or similar obstacles. Any access with a gate shall be designed so that the longest vehicle can completely clear the traveled way when the gate is closed and as it is opened.

f) High volume driveways that do not meet signal warrants may be denied certain traffic movements if traffic volumes and conditions on the highway would make the full movement operation unsafe.

6. DRIVEWAY ISLANDS

a) In some situations, it is desirable to prohibit certain movements through the use of median or channelizing islands. Median islands can be used to separate inbound and outbound traffic. A curbed island prevents egressing traffic from encroaching on the side of the drive used by ingress traffic. Channelizing islands further designate the correct turning path and define the merge area thus reducing conflicting movements. The geometry shall physically define the permitted movements and block the prohibited movements.

b) Median islands shall be at least 4 feet wide -- with a maximum of 6 feet at the intersection. Median widths exceeding 6 feet are undesirable because they create turning problems, expand the intersection, and make it difficult to provide proper lane alignments with opposing existing or future driveways or roadways. Median islands shall be at least 25 feet in length. An island median shall be used to prevent encroachment on other driveway lanes whenever any combination of egress and ingress lanes exceeds 3 lanes. A median island shall be offset at least 12 feet from the edge of the traveled lane on the main road. The nose of a median island shall taper in height from 2 inches to 6 inches over a distance of 4 feet.

7. RIGHT-IN/RIGHT-OUT

In some situations, it is desirable to prohibit left turn movements through the use of right-in/right-outs. When applicable, the City requires new development and redevelopment to employ the standards of the Butler County Engineer's Office for right-in/right-outs without an acceleration lane (with a right drop lane). Other configurations such as a right-in only, all-in/right-out, etc. will be considered on a case by case basis at the discretion of the City Engineer.

Attachment: 2020 Design, Construction, and Materials Specification Handbook (1575 : Design, Construction, and Materials Specification

WATER SUPPLY – SECTION 400

Attachment: 2020 Design, Construction, and Materials Specification Handbook (1575 : Design, Construction, and Materials Specification

SECTION 400

WATER SUPPLY

INTRODUCTION

This section is subject to periodic revision to meet changing requirements for materials, and environmental regulations, etc. At the beginning of a project, users should verify that they have the latest edition.

The latest published edition of the following documents shall be the accepted standard for materials and/or procedures for the construction, modification, alteration, or expansion of the City of Fairfield's public water distribution system:

1. ***City of Fairfield Design, Construction, and Materials Specification Handbook.***
2. ***City of Fairfield Codified Ordinances.***
3. ***Ohio EPA Laws and regulations (OEPA).***
4. ***Ohio EPA Backflow Prevention and Cross Connection Control.***
5. ***American Water Works Association Standards. (AWWA).***
6. ***American National Standards Institute (ASNI).***
7. ***National Sanitation Foundation (NSF) Standard 61.***
8. ***Recommended Standards for Water Works; "The Great Lakes Upper Mississippi River Board" (G.L.U.M.R.B.) also known as the "Ten State Standards".***
9. ***Safe Drinking Water Act (SDWA).***
10. ***National Primary Drinking Water Regulation (NPDWR) "lead and copper rule".***
11. ***American Public Health Association (APHA).***
12. ***Water Pollution Control Federation (WPCF).***
13. ***National Fire Protection Association (NFPA).***
14. ***Insurance Service Office (ISO).***
15. ***Ductile Iron Pipe Research Association (DIPRA)***

If a conflict exists between reference sources, the more restrictive requirement shall prevail. The Public Utilities Director shall provide interpretation as requested.

Plan approval by the City of Fairfield does not imply nor assure approval by the Ohio EPA. Plans are approved subject to the conditions of compliance with all applicable laws, rules, regulations and standards. The proposed project may be constructed only in accordance with the approved plans. There may be no deviation from the approved plans without the written approval of the City. Approval of the plans does not constitute an assurance that the proposed project will operate in compliance with all Ohio laws and regulations. Plans should also note "All work within the right of way within City limits will require a permit from Public Works". Permits can be found at https://www.fairfield-city.org/448/Permits-Specifications

Attachment: 2020 Design, Construction, and Materials Specification Handbook (1575 : Design, Construction, and Materials Specification

Plans shall be submitted to the Ohio EPA for approval, as required by the Public Utilities Director. The cost of submitting plans to the Ohio EPA and review by the Ohio EPA, shall be paid for by the developer. Construction shall not begin until such plans are approved by the Ohio EPA, or unless the Public Utilities Director issues a conditional release. Work that is within a roadway or public right of way will require additional review by the City of Fairfield Public Works Department.

The contractor shall give the City of Fairfield advance notice before making any connection to an existing public water main. The City of Fairfield Water Department shall close the valves on the existing main for work requiring a non-pressure installation. The work shall be performed quickly and continuously until the connection is complete, and the water service can be restored.

401.00 CONSTRUCTION REQUIREMENTS AND MATERIALS SPECIFICATIONS

401.01 Determination of Water Use

Water lines must be sized to meet present water consumption and projected average and maximum daily demands, including fire flow hazard. The design engineer shall provide calculations to establish water usage demands. Public water mains should be installed in the public right-of-way, or upon approval in a public utility easement. Using the water main as a centerline, there shall be a minimum total of 15 feet; and 7.5 feet off the center of the water main to include an open area for maintenance.

401.02 Dead Ends

Dead-ends shall be minimized by looping of water mains with multiple feed points. Where dead-ends occur, they shall terminate with a fire hydrant for flushing purposes. Water mains shall not exceed 750 feet without looping unless waived by the Public Utilities Director. Dead end mains shall be avoided if possible, by arranging for mains supplied from both directions.

401.03 Pipe Size

The minimum size of public water mains shall be 8 inches in diameter. Larger size mains will be required if necessary, to allow withdrawal of required firefighting flows while maintaining minimum pressure. Any change in sizing shall be justified by hydraulic analysis and only upon the approval of the Public Utilities Director.

Attachment: 2020 Design, Construction, and Materials Specification Handbook (1575 : Design, Construction, and Materials Specification

401.04 Pressure

All water mains, including those not designed to provide fire protection, shall be designed to maintain a minimum pressure of 20 psi at ground level. All water mains shall have a maximum pressure of 200 psi at all points in the distribution system under all conditions of flow. Pressure reducing valves (PRV) are required to be installed on the water service when the static pressure is 80 psi or greater.

401.05 Service Valves

At least one service valve shall be installed at each source of water supply, except fire department connections. A DCDA shall be installed at each connection with the exception of fire hydrant leads where one hydrant exists solely for the Fire Department's firefighting water supply.

401.06 Depth of Cover

The top of the pipe shall be buried by 4 feet of cover. Depth of covering shall be measured from the top of pipe to finished grade, and due consideration shall always be given to future or final grade, and nature of soil.

402.00 WATER MAIN PIPE MATERIALS

402.01 Ductile Iron Pipe

Only AWWA C104 Cement-Mortar Lined Ductile Iron Pipe shall be used for the construction of public water mains. All ductile iron pipe shall be designed and manufactured in accordance with AWWA C150 and C151. In no case shall less than Class 53 (ductile iron pipe wall thickness) be used. All pressure pipe shall be clearly marked as to class by the manufacturer.

Under no conditions shall pipeline deflection measured between joints exceed manufacturers published recommended standard for that type of pipe. The maximum deflection at push-on joints and/or mechanical joints shall be 5 degrees. If deflections of 5 degrees are closer together than the standard length of pipe (approximately 20 feet), thrust restraints shall be installed in accordance with the plans, or as directed by the Public Utilities Director. **See AWWA C600, Standard for the Installation of Ductile-Iron Water Mains, and Their Appurtenances. See also the Restrained Joint Lengths drawing on Page 20 of the Standard Construction Drawings.**

Attachment: 2020 Design, Construction, and Materials Specification Handbook (1575 : Design, Construction, and Materials Specification

402.02 Polyethylene Encasement

Water main piping, fittings and valves shall be encased in 8 mil polyethylene encasement as outlined in AWWA C105. On fire hydrant branches, the encasement shall be installed up to and including the flange at the fire hydrant foot valve. Where thrust blocking is required, encasement will be completed before any concrete is placed. Install polyethylene encasement prior to the placement of concrete anchors, collars, support or thrust blocks. Repair all polyethylene material damaged during construction.

402.03 Pipe Joint

All pipe joints shall conform to AWWA C111/A21.11. Gasket material shall be standard styrene butadiene copolymer (SBR) per this standard. Bolts shall be high-strength, and corrosion resistant alloy conforming to AWWA C111.

402.04 Fittings

Ductile Iron, mechanical joint fittings, 3 inch through 24 inch shall conform to ANSI for ductile iron compact fittings, and AWWA C153. All fittings shall be supplied with ductile iron glands as per ASTM A536 and all required connecting bolts, nuts, glands, gaskets and accessories. Fittings are defined as those items, which are installed in a pipeline to change direction and include all bends, tees, crosses, and wyes necessary to provide a smooth transition from one direction to another.

402.05 Tapping Sleeves and Tapping Valves

Tapping sleeves shall be used for water services larger than 2 inch in diameter. All tapping sleeves shall be either ductile iron body with mechanical joint, or 304 Stainless steel body, full circumferential seal with a ductile iron flange. Ductile iron body tapping sleeves shall be: American-Darling 1004 tapping sleeve; Clow F-5205 tapping sleeve; or Mueller H-615 tapping sleeve. Stainless steel body tapping sleeves shall be: Ford “Fast”; Romac “SST”; or Mueller H-304 with ductile iron flange. All tapping valves shall conform to AWWA C509 or C515. Valves shall have a 2-inch square operating nut for key operation and “O” ring type stem seals. All valves shall open counterclockwise, and be of the non-rising stem type. The valve sealing mechanism shall be a wedge design of ductile iron completely encapsulated with a molded resilient covering permanently bonded to the iron wedge to meet ASTM D429 testing. Tapping sleeve and valve shall be tested per manufacturer’s recommendations.

402.06 Tapping Saddles

Tapping saddles shall be utilized only when exceeding the maximum recommended direct tap size as shown in the most current Ductile Iron Pipe Research Association installation guide. Tapping saddles shall be bronze, brass, or stainless steel. They shall be band-type, or double strap type, with an AWWA tapered thread inlet.

402.07 Water Main Valve Boxes

All buried valves shall be provided with domestic manufactured cast iron valve boxes. Valve boxes shall have a screw type extension sleeve if required, and also be designed for the size of valve on which it is to be used, and with the required depth of cover. There shall be an insulating centering device between the valve box and valve. The water main valve box shall be coated with an asphaltic coating by the manufacturer. The cover shall have the word “WATER” cast in it.

402.08 Gate Valves

All valves shall be AWWA C509 or C515 (resilient seated) for water supply service. Gate valves shall be of the iron body fusion bonded epoxy, bronze mounted type and shall have non-rising bronze stems. Gate valves shall open by opening to the left (counter-clockwise) and shall be fitted with a 2-inch square operating nut. All bonnet bolts and nuts for iron body valves shall be stainless steel. Mechanical joint end connections shall conform to AWWA C111. Adjust and test valve prior to backfill. Valve shall be certified to NSF 61 Drinking Water System Components-Health Effects.

402.09 Location Frequency

Sufficient valves shall be provided on water mains so inconvenience and public health hazards are minimized during repairs. Valves shall be located no less frequently than one per block, or at 800-foot intervals. Valve clusters are required at street intersections and in every direction from a tee or cross fitting. The number of required valves and their location shall be approved by the Public Utilities Director.

403.00 FIRE HYDRANTS AND FIRE LINES (SEE ALSO SECTION 600 FIRE SERVICES)

403.01 Fire Hydrants

Fire hydrants shall conform to the "AWWA Standard for Dry-Barrel Fire Hydrants" AWWA C502 and subsequent revisions. Fire hydrants shall be connected only to water mains adequately sized to carry fire flows. The minimum size for a public fire main shall not be less than 8 inches. All fire hydrants and auxiliary valves shall be positively locked to the water main by restrained mechanical joints. The thread sizing on the 2 ½ inch hydrant nozzles shall be 3.187 x 7. All hydrants shall be provided with an integral 5" Storz fitting and cap with connecting cable. Hydrants shall have a dual rating of AWWA and FM-1510 approval. No chains connecting the 2 ½ inch caps to the hydrant or each other will be allowed.

Hydrants shall be permanently marked with the following information, which should be cast into the barrel:

a) Manufacturer's name or trademark.
b) Model or type designation.
c) Maximum rated working pressure.
d) Size of main valve opening.
e) Year of manufacture.
f) FM Approval mark.
g) The hydrant top shall have stamped on it the word "OPEN" and an arrow, showing the counterclockwise direction for opening.
h) The hydrant shall be a minimum rated working pressure of 250 psi.

All hydrants shall stand plumb and shall have their nozzles parallel with, or at right angles to the curb, with the pumper nozzle facing the curb. The horizontal centerline of the large outlet port shall be a minimum of 18 inches and a maximum of 30 inches above the final grade. In all cases the manufacturer's recommended relative elevation of the break flange to the final grade shall be maintained. The barrel shall have a breakable safety section and/or bolts just above the ground line. Hydrants shall have a main valve opening of 5 ¼ inches; a 6-inch mechanical joint inlet to be suitable for setting in a trench 4 feet deep. Each hydrant must be equipped with an auxiliary valve with valve box. The valve shall be a compression type, opening against the pressure so the main valve remains closed if the barrel is broken off. The hydrant shall provide automatic drainage when the valve is closed. Hydrants shall be effectively blocked by the placement of concrete thrust-blocking, or approved mechanical anchor. **See the Fire Hydrant Installation drawings on Pages 17 and 18 of the Standard Construction Drawings.**

Attachment: 2020 Design, Construction, and Materials Specification Handbook (1575 : Design, Construction, and Materials Specification

.

All underground water service pipe systems shall be thoroughly flushed before connection to any fire suppression system; **Refer to the "Disinfection of Water Mains" section 411.01.**

403.02 Color of Hydrants

Fire hydrants shall be coated by the manufacturer as per the City of Fairfield requirements with industrial epoxy exterior grade paint. Public fire hydrants shall be painted OSHA safety yellow. Private fire hydrants shall be painted OSHA safety red.

403.03 Spacing

a) Travel distance is defined as the route taken by fire apparatus on any surface to which it can support the weight of a fire apparatus not to be less than 75,000 lbs.
b) Spacing of fire hydrants shall be 400 feet in public rights-of-way.
c) In residential zoned areas, hydrants must be within 800 feet travel distance to a building with a flow rate of at least 1000 gpm.
d) In commercial and industrial zoned areas, hydrants must be within 400 feet of travel distance to all areas of the building with a flow rate of at least 1000 gpm. If the building is equipped throughout with an approved sprinkler system, the distance may be increased to 600 feet.
e) The number of hydrants to be provided shall be based on the required fire flow which also will be based on building construction and occupancy use.
f) All dead-end water mains shall have a hydrant. If the potential exists for an extension of the dead-end water main, a main line tee, valve and auxiliary valve shall be installed.
g) All the above-mentioned requirements under hydrant spacing are subject to change by the authority having jurisdiction.

403.04 Location

Fire hydrants shall be located to provide complete accessibility, and minimize the possibility of damage from vehicles or injury to pedestrians. When placed behind a curb, the hydrant barrel shall be set so that the pumper, or hose nozzle cap will be a maximum of 5 feet from the curb area. No fire hydrants shall be installed closer than 2 feet from the curb, street, driveway, or other traffic edge or 5 feet from any driveway apron or cross street. No portion of the hydrant or nozzle cap shall cause an obstruction to a sidewalk, or pedestrian traffic. Fire hydrants that are connected in close proximity to the public main and within the public right of way or public

Attachment: 2020 Design, Construction, and Materials Specification Handbook (1575 : Design, Construction, and Materials Specification

easement shall be considered a public fire hydrant. Fire hydrants that are connected to a private main, or that are installed for the sole purpose of fire protection on private property shall be considered privately owned fire hydrants and labeled as such on any plans.

403.05 Double Check Detector Assembly *(DCDA)*

When it is necessary for any customer to have full line flow for fire protection purposes, there shall be installed in the line a device known as a "Double Check Detector Assembly". A metered by-pass shall be provided of sufficient size to carry normal usage without activating the assembly. The detector check valve shall be as manufactured by Ames, Watts or an approved equal. A full flow meter may be used as approved by the Director of Public Utilities or his/her designee. **See the Double Check Detector Assembly drawings on Pages 22 and 23 of the Standard Construction Drawings.**

403.06 Fire Line Vault

In all cases a fire line vault is preferred; however, when a structure is more than 200 feet from the public water main, a fire line vault is required. The vault shall be constructed of ODOT QC2 concrete for the accommodation of a DCDA, and shall conform to AWWA C510-92. All pipe and fittings for fire protection purposes shall comply with all applicable NFPA requirements. The pipe supplied from the public main to a point 10 feet beyond the vault shall be Ductile Iron class 53 and comply with Section 402 of this specification. Privately owned pipe materials supplied starting 10 feet beyond the vault must comply with all AWWA standards. If a non-metallic fire line is installed after the City's metering device, the fire line shall be buried with a continuous 12ga tracer wire attached to the crown of the pipe. The tracer wire should be brought to grade in a valve box, meter pit, or vault to allow for locating equipment connections. The vault shall have a sump pump or floor drain which must discharge at a point that provides positive drainage away from the vault. The access door to vault shall be an aluminum double hatch door Bilco JD-AL Series or Halliday H-W model. The size of the vault doors shall be determined by the vault proportions and approved by the Public Utilities Director. **See the Fire Line Meter Vault With Double Check Detector Assembly drawing on Page 23 of the Standard Construction Drawings.**

403.07 Post Indicator Valve (PIV)

Connections to public water systems shall be controlled by post indicator valves of an approved type, and located not less than 40 feet from the protected building. The post indicator valves shall be placed where they will be readily accessible in case of

Attachment: 2020 Design, Construction, and Materials Specification Handbook (1575 : Design, Construction, and Materials Specification

fire. Post indicator valves shall be set so that the top of the post will be 36 inches above the final grade. Included with each PIV shall be a wrench and break away lock. Post indicator valve shall be properly protected against mechanical damage. Post indicator valves shall conform to NFPA 24.

403.08 Operating Test

Each hydrant and watch valve shall be fully opened and closed under system water pressure, and dry barrel hydrants checked for proper drainage. Where fire pumps are available, this shall be done with the pumps running. All testing shall comply with the most current version of NFPA requirements.

403.09 Fire Department Connections (FDC)

All required fire department connections or hose couplings shall be 5-inch Storz fittings and shall be placed within 100 feet of an accessible fire hydrant. All FDCs shall be red in color and 36” to their top elevation. Each FDC shall be clearly labeled with a 12” x 12” reflective sign, which is red in color with 2 inch white lettering. FDCs mounted to a building are not approved. The FDC and PIV shall be located in close proximity to each other as approved by the Fire Chief or his/her designee. **See the Double Check Detector Assembly drawings on Pages 22 and 23 of the Standard Construction Drawings.**

404.00 WATER SERVICE CONNECTIONS

404.01 Cross Connections

There shall be no connection between the water distribution system and any pipes, pumps, hydrants or tanks where there is a chance that contaminated water or other material may be discharged or drawn into the public water system. See AWWA manual 14, Backflow Prevention and Cross Connection Control and City ordinances pertaining to backflow.

404.02 Dead Ends

All dead ends on new mains shall be terminated with a valve and fire hydrant to facilitate flushing and the future extension thereof at the discretion of the Public Utility Director or his/her designee, As-Built or GPS location verification may be required.

Attachment: 2020 Design, Construction, and Materials Specification Handbook (1575 : Design, Construction, and Materials Specification

404.03 Water Services

The Contractor shall provide each lot with an individual water service. For each water service line, the Contractor shall purchase from the City and install the corporation stop, meter setting and meter pit, curb stop and curb box in a suitable manner. Taps shall be made no closer than 2 feet from a bell connection or pipe end, nor shall they be made any closer than 4 feet to each other. The elevation of the service line shall be established so that it is no less than 4 feet below the finished grade. The depth of the curb box shall be no more than 5½ feet. The service shall be set at the middle of the lot. The location of curb boxes for properties on cul-de-sac roadways shall be determined by the Director of Utilities and/or his/her designee. Water services shall not be connected to fire hydrant leads and shall extend directly from the public main whenever practical. All underground water service pipe systems shall be thoroughly flushed before a connection to any private system. The location of each curb stop shall be clearly marked with a "W" imprinted in the concrete curb, near the top before the concrete hardens. All installation work for the water service shall be performed prior to the construction of new sidewalk and the street roadway. **See the Water Service Installation drawing on Page 15 of the Standard Construction Drawings.**

All water service lines ¾", 1", 1 ½", and 2" shall be flexible Type "K" copper pipe. The minimum water service size shall be a ¾" inch diameter size. The service shall be installed from the water main into each lot. Fittings for copper service branches shall be high quality copper brass with AWWA C800 Dimensions and meeting AWWA Standards. All privately owned water services after the metering device shall comply with all AWWA standards. If a non-metallic water service is installed after the City's metering device, the service shall be buried with a continuous 12 ga tracer wire attached to the crown of the pipe. The tracer wire should be brought to grade in a valve box, meter pit or vault to allow for locating equipment connections.

404.04 Corporation Stop

Corporation stops for use with saddles shall be bronze alloy with AWWA tapered thread, and outlet thread compatible with connecting pipe, without special adapters. Corporation stops for direct tapping shall be bronze alloy with AWWA tapered inlet thread, and with outlet thread compatible with connection pipe, without special adapters. All corporation stops 3/4", 1", 1 ½", or 2" shall be Ford, Mueller or AY McDonald ball type. The corporation stop shall be installed at either the 2 o'clock or 10 o'clock position on the pipe and rotated to allow easy access to the shut off dial.

Attachment: 2020 Design, Construction, and Materials Specification Handbook (1575 : Design, Construction, and Materials Specification

404.05 Curb Stop

Service stops shall be bronze with coupling threads conforming to AWWA C800. The stop must be designed that water pressure from the inlet side of the body shall provide additional sealing action. The stop must open counter-clockwise and be manufactured with a ¼ turn stop. All curb stops 3/4", 1", 1 ½", or 2") shall be Ford, Mueller or AY McDonald quarter turn ball valve type. Service boxes shall be manufactured of cast iron and the covers shall have the word "WATER" cast in raised letters fastened by a bronze or brass bolt. The Contractor shall insure that the curb stop is free of mud and debris, and be operational at all times. Curb stop boxes shall be installed and maintained vertically so that the access to the stop-key is unobstructed. The curb stop and box shall be installed between the curb and the sidewalk for each lot. Each curb box shall be marked with a wooden stake painted blue, and inserted 18 inches into the ground next to the curb box. The blue stake shall be 36 inches above the ground level. The location of each curb stop shall be clearly marked with a "W" imprinted in the concrete curb, near the top before the concrete hardens. **See the Utility Service Location Designation drawing on Page 11 of the Standard Construction Drawings.**

405.00 METER SETS

405.01 Classification of Meter Sets

Meter sets are classified by location into two categories: Outdoor meter sets and indoor meter sets. Indoor meter sets shall only be used when outdoor meter sets cannot be used. Indoor meter sets require the approval of the Public Utilities Director. Meter sets are further classified by the use as follows: Domestic water meters and irrigation meters.

405.02 General Requirements for Meter Sets

a) All meters shall be set in an approved non-hazardous place and accessibility shall be maintained at all times.

b) The size of the meter shall be the same size as the water service, except a smaller sized meter may be installed based upon pressure available, the length of the service line and/or where it can be shown the water demand is less than the rated capacity of the meter.

c) Meters shall be installed on water service lines as soon as practical after installation of the line, but in no case will a certificate of occupancy be issued until/unless a meter is installed.

Attachment: 2020 Design, Construction, and Materials Specification Handbook (1575 : Design, Construction, and Materials Specification

d) Meters shall be owned and maintained by the Public Utilities Department.

e) Remote meter touchpads or radio read equipment shall be installed by authorized employees of the Public Utilities Department only. The Public Utilities Department shall not be responsible for defacement or damage to property caused by necessary holes, fastenings or other work required for proper installation.

The Public Utilities Department will maintain remote reading devices under the same provisions as meters. A charge for repairs to any remote reading device or connections thereto, necessitated by damage or neglect by the consumer or owner shall be made in addition to any other charge provided.

405.03 Outdoor Meter Sets

All outdoor meter sets shall be installed by a private contractor and shall conform to the following requirements:

a) Meter Pits – For services 2 inches and smaller

1) Meter sets shall be placed at the right of way line, when possible, at such location as to prevent an accumulation of water within the meter pit.

2) Meter sets shall require curb stops on public property in front of the property to be serviced.

3) Meters shall be set in a pit and in the arrangement as shown in the Standard Drawing Section of this manual. **See the Residential Meter Pit drawing on Page 16 of the Standard Construction Drawings.**

4) Outdoor meters must be in a location accessible to Public Utilities Department vehicles.

b) Meter Vault – For services 3 inches and larger

Meter vaults shall be of adequate size, and readily accessible for inspection, operation, testing, maintenance, and removal of equipment contained therein. They shall be constructed and arranged to properly protect the installed equipment from movement of earth, freezing, and accumulation of water. The pit shall be poured in place, or pre-cast reinforced concrete as approved by the Public Utilities Director.

Attachment: 2020 Design, Construction, and Materials Specification Handbook (1575 : Design, Construction, and Materials Specification

405.04 Indoor Meter Sets

All indoor meter sets must be approved by the Public Utilities Director before installation can begin. All indoor meter sets shall be installed by a private contractor and shall conform to the following requirements:

a) Meters shall not be set higher than 4 feet to center of connection above the floor.

b) Meters shall not be concealed and obstructed by cabinets, benches or other built-in fixtures.

c) Indoor meters sets shall be made as near as possible to the point where the service line enters the building.

d) Clear access to the meter set shall be maintained at all times.

e) Meter set shall be made in such a locality that reading and changing of meter shall in no way interfere with the customer's normal course of business.

f) Water meters shall be installed in a horizontal position as close as possible to the main stop. Where an approved basement is not or will not be available, the water meter shall be placed within the building or structure in an accessible location in the utility room and if no utility room is available, the meter shall be placed in an accessible location in the kitchen or other location as approved by the Public Utilities Department. The water meter shall always be located to provide protection from mechanical injury.

g) Meter Space. Accessible meter space shall be installed for all water services. Meters shall be so installed so as to be level. All meters shall be located as near as practicable to the point of entrance and in a position giving ample protection against freezing and other external damage. Water meters shall not be installed in sheds, garages, storage buildings, etc. that are not of standard construction or not properly heated.

405.05 Meters

It is the contractor’s responsibility to properly size the water service and metering system. Meters shall be sized to handle peak flows at 90 percent of rated capacity. Water meters shall be approved by the Public Utilities Director for the appropriate type of service. The applicant shall provide expected flow ranges for low, average, and peak flows, and type of metering system. All water meters shall be purchased from the City of Fairfield Public Utilities Department. Meters shall be installed by

the contractor in a clean pipeline, free from foreign materials. The meter shall be installed horizontally, with the register facing upward; with the direction of flow as indicated by the arrow cast in the meter case; protected from freezing, damage, and tampering.

Meters remain under the sole control and ownership of the Public Utilities Department and shall not be removed or tampered with by unauthorized persons. Unserviceable or defective meters will be replaced by the Public Utilities Department. Maintenance of the meter is the responsibility of the Public Utilities Department. If a customer wishes his meter tested for accuracy, the City will comply in accordance with section 921.05 of the City of Fairfield Codified Ordinances, Inspection of Meters.

405.06 Servicing of Meters

The maintenance of meters shall occur during normal working hours of the Public Utilities Department. In the event that this procedure inconveniences a customer, they may request that the meter be changed after normal working hours; however, the customer will be required to bear the cost of this service.

405.07 Charges for Change of Meters

Whenever it is requested by the customer to change an existing meter for one of a different size, the authorization for such action shall be given in writing to the Public Utilities Department. The costs for changing meters shall be borne by the customer making the request. The customer will be required to pay the difference in the increased meter size as per the effective schedule of fees. No refund fees will be given for a reduction in meter size.

405.08 Protection of Meters

The property owner will be held responsible for the meter in his custody and shall pay all costs of damage from any cause over which he has control such as freezing or hot water or vandalism. If the meter is stolen or lost, the replacement cost shall be paid by the owner.

405.09 Meters Required

All water service branches shall be metered.

405.10 Number of Meters

Only one water meter is required for each building or development complex.

Attachment: 2020 Design, Construction, and Materials Specification Handbook (1575 : Design, Construction, and Materials Specification

However, at the owner's option, a meter may be installed for each dwelling unit. The Public Utilities Director has the authority to require any new or existing building/complex to install a master meter to meter all incoming water consumption.

The supply of water from the service connection may be measured by one or more meters. When more than one meter is used in a commercial or multi-family setting, the meters shall be set in an area not under the control of any tenant and accessible to the Public Utilities Department at all times. The minimum charge for each meter shall be based on the size of each meter. When more than one meter is used, each separate service shall be subject to the same rules and regulations as a service where one branch serves a single meter.

Proper provision shall be made to permit the City to discontinue service either by:

a) Installation of separate curb stop valves in public right-of-way or easements and separate lines from the curb stop to the meter,

Or

b) One valve and one line to the meter room and installation of lockout valves on the individual meters; and the right to enter upon private property by the Public Utilities Department to the location of the meters and lockouts. Denial of the right of entrance will result in the turn-off of water at the water main.

It is expected that the situation detailed in b) above will be for multi-family units where one service is run into the meter room and each individual service is taken from a manifold.

Meter readings shall be used to calculate utility charges. However, the Public Utilities Department shall be authorized to use other means, such as estimation, to calculate charges when it is apparent that a meter has not been operating properly, if it has been removed or cannot otherwise be read.

405.11 Manifolded Meters

a) Manifolded public meter sets are prohibited in new installations, unless authorized by the Public Utilities Director.

b) Meters set inside a building in an existing manifold shall be set and maintained in accordance with Public Utilities Department Standards.

c) Meters may not be placed in manifold unless the total of such meters

Attachment: 2020 Design, Construction, and Materials Specification Handbook (1575 : Design, Construction, and Materials Specification

satisfies the minimum requirements determined by the size of the service branch being utilized.

d) All water meters placed in manifold shall have the inlet valve equipped with padlock wings.

e) All rules which apply to the billing and collecting for individual service shall apply to every meter in manifold.

f) A meter set in manifold shall be considered an active account until the inlet valve is locked in the off position and the account is placed in hold status.

405.12 Deduct Meters; Water-Only Meters

When a considerable amount of water delivered to any premises is not returned to the City's wastewater collection system, the customer may apply to the City to allow for the installation of a separate water meter (also known as sewer deduct meter) to accurately quantify the amount of such water not returned to the wastewater disposal system. If approved by the Public Utilities Director or designee, the customer shall not be billed sewer use charges for such metered water not returned to the sewage disposal system. The cost of the water meter and its installation shall be the responsibility of the customer. The manner of installation of the meter and other related conditions must be specifically approved by the Public Utilities Director.

For irrigation purposes, and depending on the plumbing configuration, the customer may apply to the City to allow for the installation of a separate water-only meter as an alternative to a sewer deduct meter. This configuration requires an independent irrigation water line tapped from the public main separately from the domestic line, or the irrigation line tapped off the domestic water service prior to the primary water meter. If approved by the Public Utilities Director or designee, the customer shall only pay water charges on usage registered through the water-only meter. The cost of the water meter and its installation shall be the responsibility of the customer. The manner of installation of the meter and other related conditions must be specifically approved by the Public Utilities Director.

406.00 SEPARATION OF WATER MAINS AND SEWERS

406.01 Separation of Water Mains and Sewers

In all cases, the most recent revision of *Recommended Standards for Water Works* and *Recommended Standards for Wastewater Facilities* shall be followed. The

Attachment: 2020 Design, Construction, and Materials Specification Handbook (1575 : Design, Construction, and Materials Specification

following factors should be considered in providing adequate separation between water mains and sewers:

a) Materials and joint placement for water and sewer pipe.
b) Soil conditions.
c) Service and branch connections into the water main and sewer pipe.
d) Compensating variations in horizontal and vertical separation between water main and sewer pipe.
e) Space for repair and alterations between water mains and sewer pipe.
f) Off-setting of pipes around manholes and other obstructions.
g) No water pipe shall pass through or come into contact with any part of a sewer, or sewer manhole.

406.02 Parallel Installation of Water and Sewer Lines

Under normal conditions, water mains shall be laid at least 10 feet horizontally from any sanitary sewer, storm sewer, or sewer manhole. The distance shall be measured from edge of pipe to edge of pipe. When conditions prevent a horizontal separation of 10 feet, a water main may be laid closer to a storm or sanitary sewer provided that the bottom of the water main is at least 18 inches above the top of the sewers. Where this vertical separation cannot be obtained, the sewer shall be constructed of materials with joints that equivalent to water main standard of construction. In addition, they shall be pressure tested to assure water tightness prior to backfilling.

406.03 Crossing of Water and Sewer Lines

Under normal conditions, water mains shall not cross lateral sewers, or sanitary sewers. Water mains shall be laid to provide a vertical separation of at least 18 inches between the bottom of the water main and the top of the sewer. When conditions prevent a vertical separation of 18 inches, sewers shall be constructed of materials with joints that equivalent to water main standards of construction, and shall be pressure tested to assure water tightness before backfilling.

All water mains passing under a sewer shall have the following additional protection:

a) A vertical separation of at least 18 inches between the bottom of the sewer and top of the water main.
b) Adequate structural support for sewers to prevent excessive deflection of joints and seepage.

Attachment: 2020 Design, Construction, and Materials Specification Handbook (1575 : Design, Construction, and Materials Specification

c) The length of the water pipe centered at the point of crossing, so water main joints shall be equidistant from the sewer, and as far away as possible from the sewer.
d) No water pipe shall pass through, or come in contact with any part of the sewer manhole.

407.00 PROTECTION AND INTERRUPTION

407.01 Protection of Existing Underground Utilities

The accuracy and location of existing underground utilities as shown on plans is not guaranteed. It shall be the duty of the Contractor to locate these utilities in advance of excavation, and to protect same from damage after uncovering. The Contractor shall contact the owners of the utilities for assistance in locating these service lines. The Contractor shall call the Ohio Utilities Protection Service (8-1-1 or 1-800-362-2764) at least 48 hours in advance of digging. Any expense incurred by reason of damaged or broken lines shall be the responsibility of the Contractor.

407.02 Service Interruptions

It is the responsibility of the Contractor to notify the Public Utilities Department in advance, when it becomes necessary for the purpose of making connections, or to shut off, or to turn on the water in existing mains. Such work shall not be performed outside the City's normal business hours or during City observed holidays. These holidays can be found on the City of Fairfield's website. The Contractor shall notify the City Water Division as to when, and for how long the water service will be interrupted. No valve or other control on the existing system shall be operated for any purpose by the Contractor. The City of Fairfield will operate all valves, hydrants, blow-offs, and curb-stops.

408.00 EXCAVATION

408.01 Trenching and Excavation

a) No trenching or laying of pipe and fittings shall be done until grade stakes have been set. The Contractor shall use excavating equipment that produces an even trench foundation. The trench shall conform to the *Typical Trench Detail* found in the *Standard Construction Drawings*. All water lines shall be installed with a minimum cover of 48 inches. The open trench ahead of pipe-laying shall be kept to a minimum, and shall not be in excess of 25 feet at the end of the working day, or at the ceasing of work.

Attachment: 2020 Design, Construction, and Materials Specification Handbook (1575 : Design, Construction, and Materials Specification

b) Open cut trenches shall be sheeted and braced as required by governing state laws, and municipal ordinances, and as may be necessary to protect life, property, the work, or as ordered by the project engineer, or inspector. To protect persons from injury, and to avoid property damage, adequate barricades, construction signs, torches, red lanterns, and guards shall be placed and maintained during the progress of the construction work until it is safe.

c) The width of the trench shall be ample to permit the pipe to be laid and joined properly, and the backfill to be placed and compacted as specified. Trenches shall be of such extra width, when required, to permit the convenient placing of timber supports, sheeting and/or bracing.

d) Whenever wet or unstable soil is incapable of properly supporting the pipe in the trench bottom; such soil shall be removed to the depth and length as determined by the engineer or project inspector. The trench shall be back filled to grade with a controlled or non-shrinkable type of back fill as determined by the City of Fairfield.

e) All grading in the vicinity of a trench excavation shall be controlled to prevent surface water from flowing into the trench. Any water accumulating in the trench shall be removed by pumping or other approved method. Material excavated from the trench shall be stacked in an orderly manner at a safe, sufficient distance away from the trench edge. The project inspector will have the contractor remove materials unsuitable for backfilling. The Contractor will keep the City informed a reasonable time in advance of the location and time that the Contractor intends to work. Any unauthorized excavation below grade shall be backfilled at the Contractors expense with good, well-compacted material.

f) All trenching, grade and cover work shall conform to the lines and grades given by the engineer. Work shall be done according to the drawings and specifications; subject to such modifications as the City of Fairfield may determine necessary during the project period. **See the Trench Detail drawing on Page 3 of the Standard Construction Drawings.**

g) For public and private work within the City's right-of-way, the contractor performing the work is required to restore any disturbed areas in the right-of-way within 48 hours after the completion of the work.

Attachment: 2020 Design, Construction, and Materials Specification Handbook (1575 : Design, Construction, and Materials Specification

408.02 Allowable Removal of Pavement

No trenching or tunneling shall be permitted in a public roadway, or right of way, unless authorized by permit and review by the Public Works Department. The Contractor shall utilize full depth sawing to assure the breaking of pavement along straight lines. The face of the remaining pavement shall be approximately vertical. If the Contractor removes or damages pavement or surfaces beyond the limits specified, such pavement and surfaces shall be repaired or replaced at the Contractors expense. The Public Works Department must be notified 24 hours in advance and an inspector present for any pavement restoration to be acceptable.

408.03 Trenchless Methods

Trenchless methods (Boring, tunneling, etc.), when necessary, shall be done under the supervision of the engineer or project inspector. No trenchless work shall be permitted in a public roadway or right-of-way, unless authorized by permit and review by the Public Works Department. The Public Works Department must be notified 24 hours in advance and an inspector must be present. **See the Casing Pipes drawing on Page 19 of the Standard Construction Drawings.**

408.04 Protection of the Public

During the period that any work is being performed within the public right-of- way, or that an open trench or pit exists within the limits of said right-of-way, the Contractor shall furnish and utilize such signs, lights, barricades, and safety devices in order to properly guide and protect the public. The Contractor shall conduct his work to not interfere with public travel. Whenever it is necessary to cross or interfere with railroads, intersecting streets, driveways, public or private, crosswalks, or approaches to any buildings, the Contractor shall provide and maintain a safe bridge or crossing for public travel. The Contractor shall promptly remove any temporary structures when requested by the city. The Contractor shall post, where directed by the engineer, suitable signs indicating that the street is closed, and necessary detour signs for the proper maintenance of traffic compliant with the most recent version of the *Ohio Manual and Uniform Traffic Control Devices.*

409.00 INSTALLATION

409.01 Installation

a) Pipe and fittings shall be handled in such a manner as to insure delivery to the work in a sound, undamaged condition. All pipe shall be inspected for

Attachment: 2020 Design, Construction, and Materials Specification Handbook (1575 : Design, Construction, and Materials Specification

defects before installation. All pipe, fittings, valves, and hydrants shall be carefully lowered into the trench piece by piece by means of a derrick, ropes, or other suitable tools or equipment, in such a manner as to prevent damage to water main materials, protective coatings, and linings. Under no circumstances shall the water main materials be dropped, or dumped into the trench.

b) All pipe or fittings shall be carefully examined for cracks, and other defects while suspended above the trench immediately before installation into final position. Defective pipe or fittings shall be laid aside for inspection by the engineer, or inspector who will prescribe corrective repairs or rejection.

c) The pipe and fittings shall be thoroughly cleaned by swabbing before being lowered into the trench, and shall be kept clean until the joints are completed. Every precaution shall be taken to prevent foreign material from entering the pipe while it is being placed in the trench. All open ends are to be closed to with caps or plugs at all times, unless pipe is actually being laid. At times when pipe laying is not in progress, the open ends of the pipe shall be closed by watertight plug or other means approved by the engineer, or inspector. This provision shall apply during the noon hour as well as overnight. If water is in the trench, the seal shall remain in place until the trench is pumped completely dry.

d) Deflections from a straight line or grade, as required by vertical or horizontal curves, shall not exceed manufacturer's recommendations and approval by the engineer or project inspector. Valve boxes shall have the interiors cleaned of all foreign matter before installation.

e) Mechanical joints shall be installed under the provisions of the recommendations of the joint manufacturer. Fittings at bends or dead-ends shall be firmly blocked against the vertical face of the trench to prevent fittings from being blown off the lines when under full pressure. Thrust blocking shall conform to City of Fairfield specifications. Where pipe ends are left for future connections, they shall be valved, plugged, or capped as shown on the plans. Where connections are made, between any new work and existing mains, the connections shall be made by using the fittings as required by the City of Fairfield.

409.02 Thrust Blocking

When required on existing mains, all bends over 5 degrees, shall be securely blocked against movement with concrete blocking placed against undisturbed earth

Attachment: 2020 Design, Construction, and Materials Specification Handbook (1575 : Design, Construction, and Materials Specification

in accordance with AWWA C600. All concrete shall be Class QC1/QC Misc. **See the Thrust Blocking drawing on Page 21 of the Standard Construction Drawings.**

Concrete thrust blocking shall be placed at least 2 days in advance of testing mains. All caps or plugs used in mains to undergo hydrostatic testing, shall be properly installed and thrust blocked in advance. All securing and blocking of caps shall be inspected by the City Water Division, or project inspector.

409.03 Restrained Joint Systems

When restraint is required on new water mains, connections must be restrained by restraining joint systems, or locking gaskets provided that sufficient length is available. Retraining joint systems are acceptable when designed in accordance with "Thrust Restraint Design for Ductile Iron Pipe" and shall meet ASTM A536-80. **See the Restrained Joint Lengths drawing on Page 20 of the Standard Construction Drawings.**

409.04 Pipe Cutting

Cutting the pipe shall be kept to a minimum, and shall be done in a neat and skillful manner without damage to the pipe. Cutting shall be done by means of an approved mechanical cutter. Wheel type cutters shall be used when practical.

409.05 Connection to City Mains

Newly installed piping shall not be connected to existing City mains until disinfected per AWWA C651 and have passed pressure and leakage tests. Test plugs, corporation stops, connecting sleeves, and temporary piping to a water source, shall be furnished by the Contractor.

410.00 BACKFILLING

410.01 Backfilling of Trenches

a) The Contractor shall remove and properly dispose of all surplus materials from the work site. In addition, the Contractor shall restore berm, and unpaved driveways to original condition. The Contractor shall reinstall any fencing, mail boxes, signs, poles, etc. that were removed for the installation of the water mains. The removal and disposal of surplus materials shall be done at the Contractors expense.

Attachment: 2020 Design, Construction, and Materials Specification Handbook (1575 : Design, Construction, and Materials Specification

b) The Contractor shall use sod or seeding to restore any grass areas damaged or destroyed by the installation of the water mains. The use of sod or seeding shall be determined and mutually agreed upon by the Contractor and the Public Utilities Director. Reasonable protection and care, including any necessary watering of sod or seed, shall be maintained by the Contractor until a satisfactory stand of grass has been established.

c) Backfilling shall not be done in freezing weather, except by permission of the Public Utilities Department or the project inspector. Backfilling shall not be made with frozen material. No fill shall be made where the material already in the trench is frozen.

410.02 Backfilling Under Pavement

Flowable controlled density fill (Low Strength Mortar –LSM 50) shall be per ODOT 613 under the roadway and curb. Granular backfill item 304 may be used under private driveways. **See the Trench Detail drawing on Page 3 of the Standard Construction Drawings.**

411.00 TESTING, DISINFECTING, AND FLUSHING MAINS

411.01 Disinfection and Flushing of Water Mains

The Contractor shall pay for the costs of disinfecting, and flushing of the water mains as well as the cost for all required bacteriological tests. The Contractor shall furnish all labor, pumps, pipe connections, additional line plugs, adapters, caps, and other necessary apparatus and materials. All work shall conform to the “AWWA Standard for Disinfecting Water Mains”; AWWA C-651.

412.00 PRESSURE AND LEAKAGE TEST

412.01 Pressure Testing

The Contractor shall pay for the costs of hydrostatic and/or leakage testing of all new water mains. The Contractor shall furnish all labor, pumps, pipe connections, additional line plugs, adapters, caps, and other necessary apparatus and materials. All work shall conform to AWWA Standard “Installation of Ductile Iron Mains and their Appurtenances” and the most current version of DIPRA’s Installation Guide for Ductile Iron Pipe.

Attachment: 2020 Design, Construction, and Materials Specification Handbook (1575 : Design, Construction, and Materials Specification

412.02 As-Builts

Within thirty days after completion of construction work on any part of the water system, the contractor shall provide a complete set of certified, reproducible as-built drawings to the Public Utilities Director or his/her designee, for all water improvements and repairs, including those constructed in subdivisions and on private property. These plans must be clearly marked "As-built" on every sheet with all water services, fire hydrants and main valve locations verified by a post construction survey made at the Contractor's expense.

As-built plans shall be provided on reproducible sheets measuring 24 inches by 36 inches and sealed and signed by the engineer to certify that the as-builts are per field conditions and along with an AutoCAD file (.dwg or .dxf).

413.00 BACKFLOW PREVENTION, CROSS-CONNECTION CONTROL, AND BOOSTER PUMPS

413.01 General

If, in the judgment of the Public Utilities Director and/or his/her designee, an approved testable backflow prevention device is necessary for the safety of the public water system, notice will be given to the water customer to install and maintain such an approved device. The water consumer, at their own expense, shall install such an approved device at a location and in a manner approved by the Director and shall have inspections and tests made of such approved devices on an annual basis.

All provisions of the most current edition of Chapter 3745-95 of the Ohio Administrative Code (OAC) are hereby incorporated into this Handbook.

413.02 Booster Pumps

No person shall install or maintain a water service connection where a booster pump has been installed, unless an approved method is in place and is operational to maintain a minimum suction pressure. The water consumer, at his own expense, shall have inspections and tests made of any approved device installed for the purpose of minimum suction pressure maintenance on an annual basis. Tests shall be performed to certify to the supplier of water that the device is in proper working order.

All provisions of the most current edition of Chapter 3745-95 of the Ohio Administrative Code are hereby incorporated into this Handbook.

Attachment: 2020 Design, Construction, and Materials Specification Handbook (1575 : Design, Construction, and Materials Specification

Attachment: 2020 Design, Construction, and Materials Specification Handbook (1575 : Design, Construction, and Materials Specification

413.03 Violations

a) The supplier of water shall deny or discontinue, after reasonable notice to the occupants thereof, the water service to any premises wherein any required backflow prevention device is not installed, tested and maintained in a manner acceptable to the supplier of water, or if it is found that the backflow prevention device has been removed or bypassed or if an unprotected cross-connection exists on the premises or if a required low pressure cut-off device is not installed and maintained in working order or if the supplier of water or the Public Utilities Director or the authorized representative of either, is denied entry to determine compliance with this section.

b) Water service to such premises shall not be restored until the consumer has corrected or eliminated such conditions or defects in conformance with all applicable provisions of OAC 3745-95 and to the satisfaction of the supplier of water.

WASTEWATER – SECTION 500

Attachment: 2020 Design, Construction, and Materials Specification Handbook (1575 : Design, Construction, and Materials Specification

SECTION 500

WASTEWATER

INTRODUCTION

This section is subject to periodic revision to meet changing requirements for materials, and environmental regulations, etc. At the beginning of a project, users should verify that they have the latest edition.

The latest published edition of the following documents shall be the accepted standard for materials and/or procedures for the construction, modification, alteration, or expansion of the City of Fairfield's public wastewater system.

1. ***City of Fairfield Design, Construction, and Materials Specification Handbook.***
2. ***City of Fairfield Codified Ordinances. Sewers Chapter 925.***
3. ***Ohio EPA Laws and Regulations (OEPA).***
4. ***Ohio EPA Backflow Prevention and Cross Connection Control.***
5. ***Recommended Standards for Sewage Works, "The Great Lakes Upper Mississippi River Board" (G.L.U.M.R.B.) also known as "The Ten Sate Standards".***
6. ***The Clean Water Act (CWA).***
7. ***40 Code of Federal Regulations Part 403. General Pretreatment Regulations.***
8. ***National Pollutant Discharge Elimination System (NPDES).***
9. ***Ohio Revised Code (ORC) 6111.032- Ohio Pretreatment Program.***
10. ***Solid Waste Disposal Act (SWDA).***

If a conflict exists between reference sources, the more restrictive requirement shall prevail. The Public Utilities Director shall provide interpretation, as requested.

Section 500 is intended to convey the general design and construction requirements for a typical project. It also lists specific City of Fairfield Wastewater Department requirements relating to plan review, inspection, testing, and acceptance of facilities. It is not intended as a substitute for site-specific engineering. Individual project conditions may require variances from the provisions in this document in which case the variances should be noted in the plans and other data submitted by the project design professional for the City of Fairfield's approval.

The standard details in the appendix are supplemental to the general construction materials and specifications. If the developer or designer notes any discrepancies or desires an interpretation of a specification, they shall submit their question to the City of Fairfield in writing for a decision.

Attachment: 2020 Design, Construction, and Materials Specification Handbook (1575 : Design, Construction, and Materials Specification

"Wastewater or sewage" means the spent water of a community, and may be a combination of the liquid and water-carried wastes from residences, commercial buildings, industrial plants, and institutions, together with any ground water, surface water, and storm water that may be present.

Any single family, or multi-family dwelling, commercial or industrial establishment shall be connected to a public sewer if the sanitary lines are available for connection. Service shall be considered available if the property can be connected by gravity flow within 100 feet of a main sanitary line in any public right-of-way or easement. Service may also be considered available if the property can be connected by force main within 500 feet of a main sanitary line in any public right-of-way or easement. The connection shall be at the cost of the property owner.

In all buildings in which any building drain is too low to permit gravity flow to the sewer main, sanitary sewage carried by such drain shall be lifted by artificial means as approved by the Public Utilities Director, and discharged into the sewer service.

Sewer availability will be determined by the City of Fairfield, or representative of the municipal authority in the area of the proposed development. The City of Fairfield will review the preliminary plans to determine if the wastewater treatment facilities, lift stations, and sanitary lines in the area of the proposed development have sufficient capacity to serve the proposed development.

Septic tanks, leech fields and mound systems are under the authority and review of the Butler County Board of Health. Butler County sanitary sewers are under the authority and review of Butler County Water and Sewer.

If the Director of Public Utilities, or his/her designee, requires that a subdivision sewer or sewers must be larger than the size required to handle the sewage flow from the subdivision, due to expansion of the sewer system beyond the subdivision in the future, the City shall pay the developer the difference in cost for the larger piping materials. Additional installation cost for the larger piping is the responsibility of the developer.

ABBREVIATIONS

The following abbreviations used in this manual shall have the designated meanings:

- **AASHTO** - ***American Association of State Highway Transportation Officials***
- **ABS** - ***Acrylonitrile-Butadiene-Styrene***
- **ANSI** - ***American National Standards Institute***

- **ASTM** - *American Standard Test Methods*
- **BCWS** - *Butler County Water and Sewer*
- **BOD** - *Biochemical Oxygen Demand*
- **CCTV** - *Closed Circuit Television*
- **CFR** - *Code of Federal Regulations*
- **COD** - *Chemical Oxygen Demand*
- **CWA** - *Clean Water Act*
- **DI** - *Ductile Iron*
- **FOG** - *Fats, Oils, Grease*
- **GI** - *Grease Interceptor*
- **GLUMRB** - *Great Lakes Upper Mississippi River Board*
- **Gpd** - *Gallons per Day*
- **Mg/l** - *Milligrams per Liter*
- **NACE** - *National Association of Corrosion Engineers*
- **NSF** - *National Sanitary Foundation*
- **NPDES** - *National Pollutant Discharge Elimination System*
- **ODOT** - *Ohio Department of Transportation*
- **OEPA** - *Ohio Environmental Protection Agency*
- **ORC** - *Ohio Revised Code*
- **PDI** - *Plumbing and Drainage Institute*
- **POTW** - *Publicly Owned Treatment Works*
- **PVC** - *Polyvinyl-Chloride*
- **RCRA** - *Resource Conservation and Recovery Act*
- **SAE** - *Society of Automotive Engineers*
- **SDR** - *Standard Dimension Ratio*
- **SIC** - *Standard Industrial Classification*
- **SSPWC** - *Standard Specification Public Works Construction*
- **SWDA** - *Solid Waste Disposal Act*
- **TDH** - *Total Dynamic Head*
- **TOMP** - *Toxic Organics Management Plan*
- **TSS** - *Total Suspended Solids*
- **UPC** - *Uniform Plumbing Code*
- **USEPA** - *U.S. Environmental Protection Agency*

501.00 DISCHARGES TO WASTEWATER COLLECTION SYSTEM

501.01 Prohibited Discharges

No person shall discharge or cause to be discharged any storm water, surface water, ground, roof runoff, subsurface drainage, cooling water, or unpolluted industrial process water into any sanitary sewer of the City of Fairfield, or permit

Attachment: 2020 Design, Construction, and Materials Specification Handbook (1575 : Design, Construction, and Materials Specification

or allow to be discharged or conveyed to a public sewer any wastewater containing pollutants of such character or quantity that will:

a) Not be susceptible to treatment or interfere with the process or efficiency of the treatment system.
b) Constitute a hazard to human or animal life, or to the stream or water course receiving the treatment plant effluent.
c) Violate pretreatment standards.
d) Cause the treatment plant to violate its NPDES permit, or applicable receiving water standards.

No person shall discharge or cause to be discharged without prior written approval of the Director of Public Utilities, or his/her designee, any hazard waste into the sanitary sewer of the City of Fairfield. A hazardous waste shall be defined by OAC 3745-51-21 to 3745-51-24 inclusive, or is a waste listed in OAC 3745-51-31, 3745-51-32, 3745-51-33(E), or 3745-51-33(F).

501.02 Special Discharges

Special discharges to the wastewater collection system are prohibited unless approved in writing by the Public Utilities Director. An application for special discharges can be made through email at public_utilities@fairfieldoh.gov or regular mail at 5021 Groh Lane, Fairfield, Ohio 45014. There is no application fee for a special discharge. If the discharge is approved, the discharger will be billed for the amount of wastewater discharged to the City system in accordance with the effective wastewater treatment rates. Any analytical data obtained during the process of discharging to the wastewater collection system shall be submitted to the Public Utilities Department within 7 calendar days along with the total volume of water discharged to the system.

502.00 APPROVAL

502.01 Wastewater Approval

Plan approval by the City of Fairfield does not imply, nor assure approval from the Ohio EPA. Approval of the plans does not constitute an assurance that the proposed project will operate in compliance with all Ohio laws and regulations. Plans are approved subject to the conditions of compliance with applicable laws, rules, regulations, and standards. The proposed project may be constructed only in accordance with the approved plans. There may be no deviation from the approved plans without the written approval by the Director of Public Utilities, or his/her designee. Plans should contain a note stating “All work within the

Attachment: 2020 Design, Construction, and Materials Specification Handbook (1575 : Design, Construction, and Materials Specification

right-of-way within City limits will require a permit from Public Works". Permits can be found at https://www.fairfield-city.org/448/Permits-Specifications.

As required by the Director of Public Utilities or his/her designee, plans shall be submitted to the Ohio EPA for approval. The cost of submitting plans to the Ohio EPA, and review by the Ohio EPA shall be paid by the developer. Construction shall not begin until such plans are approved by the Ohio EPA, or unless the Director of Public Utilities, or his/her designee, issues a conditional release.

All sewers connecting to the City of Fairfield's public sewer system shall comply with all City of Fairfield standards, as well as federal, state, and City ordinances. The Public Utilities Director and other authorized employees of the City bearing proper credentials and identification shall be permitted to enter into or upon all properties for the purpose of inspection, observation, measurement, sampling, and testing, in accordance with the provisions of this section. No tie-in shall be made except in the presence of the City of Fairfield Inspector.

Inspection of Construction – See Section 102.00.

502.02 Determination of the Amount of Sewage and Average Flows

The average flow of sanitary sewage shall be computed on the basis of 100 gallons per capita. The estimated flows listed are to be used only for the design of sewers and lift stations, and should not be used in the design of treatment plants.

WASTEWATER SOURCE	ESTIMATED SEWAGE FLOW (gallons - per -day)
Airports	
Per Employee	20
Per Passenger	5
Apartments	
One bedroom	250
Two bedroom	300
Three bedroom	350
Assembly Halls	
Per seat	2
Bowling Alleys (no food service)	
Per Lane	75

Attachment: 2020 Design, Construction, and Materials Specification Handbook (1575 : Design, Construction, and Materials Specification

WASTEWATER SOURCE	ESTIMATED SEWAGE FLOW (gallons - per -day)
Camps	
With individual bath units-per person	50
With central bath house per person	35
Churches	
Small- per sanctuary seat	3-5
Large with kitchen-per sanctuary seat	5-7
Dance Halls	
Per person at maximum capacity	2
Factories	
No showers per employee	25
With showers per employee	35
Family Dwelling	
Per person	100
Food Service Operations	
Restaurant per seat	35
Banquet rooms-per seat	5
Tavern (very limited food service) per seat	35
Hospitals	
No resident personnel per bed	300
Institutions	
Residents per bed	100
Laundries	
Coin operated-per machine (standard size)	400
Motels	
Per Unit	100
Nursing and Rest Homes	
Per patient	150
Per resident employees	100
Office Buildings (exclusive of cafeteria)	
Per employee per shift	20

Attachment: 2020 Design, Construction, and Materials Specification Handbook (1575 : Design, Construction, and Materials Specification

WASTEWATER SOURCE	ESTIMATED SEWAGE FLOW (gallons - per -day)
Playgrounds and Daytime Parks	
With toilet facility-per person	5
With showers, bathhouse toilets-per person	10
Schools	
Elementary (not including showers or cafeteria-per pupil)	10
High and Junior High (not including showers or cafeteria per pupil)	15
Add for cafeteria – per pupil	5
Add for showers – per pupil	5
Service Gas Station	1000
Shopping Centers (without food service or laundries)	
Per area of floor space	0.2/sq.ft
Swimming Pool (average with hot shower)	
Per swimmer	3-5
Theaters	
Movie – per seat	5
Trailer Parks (mobile home parks)	
Per trailer space	300
Travel Trailer and Recreational Vehicle (parks and camps)	
Per trailer or tent space	125
Vacation Cottages	
Per person	50

502.03 Peak Flows

Sanitary sewers shall be designed on a peak flow basis using a peak factor of 4 times the total calculated average daily wastewater flow for collector sewers, and a peak factor of 2.5 for sub-mains and truck sewers. Pumps and force mains should be designed to carry the peak flow of all the sewers that discharge into the lift station. The peak flow for areas which do not have a 24-hour run-off period shall be calculated as follows:

$$\text{Peak Factor} \times \left(\frac{\textit{Calculated Wastewater Flow(gallons) x 24 hours}}{\textit{Run-off period (in hours)}}\right) = \textit{gpd}$$

Attachment: 2020 Design, Construction, and Materials Specification Handbook (1575 : Design, Construction, and Materials Specification

Peak Factor = 4.0 for collector sewer mains.
Peak Factor = 2.5 for trunk main sewers.

ENTITY	RUN-OFF PERIOD
Municipality	24 hours
Factories	Length of shift
Subdivisions (over 250 homes)	24 hours
Subdivisions (under 250 homes)	16 hours
Hospitals	12-24 hours
Camps	16 hours
Schools	8 hours
Restaurants	4 hours
Boarding Schools	16 hours
Mobile Home Parks	12 hours
Apartments	12 hours
Motels	4 hours

**Use of other run-off periods must be documented.*

503.00 DESIGN OF SEWERS

503.01 Approval of Sewers

In general, the City of Fairfield will approve plans for new systems, extensions to new areas, or replacement sanitary sewers only when designed upon the separate basis, in which rain water from roofs, streets, and other areas, and groundwater from foundation drains are excluded.

503.02 Design Capacity and Design Flow

In general, sewer capacities should be designed for the estimated ultimate tributary population, except in considering parts of the systems that can be given to the maximum anticipated capacity of institutions, industrial parks etc. Where future relief sewers are planned, economic analysis of alternatives should accompany initial permit applications.

503.03 Minimum Size

All public sanitary sewers conveying raw sewage shall be a minimum of 8 inches in diameter. Sanitary sewer laterals shall be a minimum of 6 inches of diameter,

Attachment: 2020 Design, Construction, and Materials Specification Handbook (1575 : Design, Construction, and Materials Specification

and run to within 5 feet of the building, and tied directly into the building sanitary sewer.

503.04 Depth

In general, sewers should be sufficiently deep to receive wastewater from basements, and to prevent freezing. Insulation shall be provided for sewers that cannot be placed at a depth sufficient to prevent freezing. A minimum depth for sewer laterals shall be 36 inches from the crown of the lateral to afford protection from frost. Sewer installation requiring less cover shall require the approval of the Director of Public Utilities, or his/her designee.

503.05 Buoyancy

Buoyancy of sewers shall be considered and shall be prevented with appropriate construction. The flotation of the pipe shall be prevented with appropriate construction where high groundwater conditions are anticipated.

503.06 Location

Public sewer mains shall be installed in public right-of-way, or upon approval, in a public utility easement. The width of a permanent sewer maintenance easement shall be governed by the following depth chart:

Depth	Width of Maintenance Easement
10-15 feet	20 feet
16-20 feet	30 feet
21-30 feet	2.0 x depth of sewer, plus 10 feet

**Sewers greater than 25 feet of depth shall require the approval of the Director of Public Utilities.*

The sewer maintenance easement shall be no less than 20 feet wide, and shall be totally within the public right-of-way, or public utility easement. The easement shall be evenly divided on both sides of the sewer line.

503.07 Flow Velocities

All sewers shall be designed and constructed to give mean velocities, when flowing full, of not less than 2.0 feet per second, based on Manning's formula using an "n" value of 0.013. When velocities greater than 12 feet per second are

Attachment: 2020 Design, Construction, and Materials Specification Handbook (1575 : Design, Construction, and Materials Specification

expected, provisions should be made to protect against displacement by erosion and impact.

503.08 Minimum Allowable Slope

The following minimum slopes, should be provided for sewers 18 inches or less. However, slopes greater than these may be desirable for construction, to control sewer gases, or to maintain self-cleansing velocities at all rates of flow within the design limits.

The minimum allowable slope shall be that which results in a velocity of at least 2 feet per second when the sewer pipe flows at ¼ of full depth. Sewers of 18 inches or less shall be laid with uniform slope and straight alignment between manholes. The line and grade alignment shall be checked with laser instruments.

Sewer size	Min. Slope 2.0 FPS Velocity (ft./100ft.) n-0.013	Approx. Capacity Minimum Slope (GPD)	Approx. Capacity Minimum Slope (CFS)
8 inch	0.50	520,000	0.80
10 inch	0.28	750,000	1.16
12 inch	0.22	1,100,000	1.70
15 inch	0.15	1,680,000	2.60
18 inch	0.12	2,330,000	3.60

503.09 Minimum Flow Depths

No slopes less than the recommended minimum will be permitted unless approved by the Director of Public Utilities or his/her designee.

503.10 Minimum Solids Deposition

The pipe diameter and slope shall be selected to obtain the greater practical velocities to minimize settling problems. Oversize sewers will not be approved to justify using flatter slopes. If the proposed slope is less than the minimum slope of the smallest pipe, which can accommodate the design peak hourly flow; the actual depths and velocities (minimum, average and maximum) shall be calculated by the design engineer, and shall be included in the plans.

Attachment: 2020 Design, Construction, and Materials Specification Handbook (1575 : Design, Construction, and Materials Specification

503.11 Steep Slope Protection

Sewers of a 15% slope or greater shall be anchored with concrete anchors spaced as follows:

a) Grades from 15% to 35% shall be anchored on 36 feet center to center.
b) Grades from 36% to 50% shall be anchored on 24 feet center to center and must be approved by the Public Utilities Director.
c) Grades from 51% and over shall be anchored on 16 feet center to center and must be approved by the Public Utilities Director.

503.12 Alignment

In general, sewers shall be laid with straight alignment between manholes. Straight alignment shall be checked by using a laser beam. A laser beam system shall conform to OSHA requirements, and have an early warning system. See Section 507.04 Laser System.

503.13 Changes in Pipe Size

A manhole or approved structure shall be placed at all changes in pipe diameter. At no time shall a pipe of a larger diameter flow into a pipe of a smaller diameter without the approval of the Public Utilities Director. The invert of the larger sewer should be lowered sufficiently to maintain the same energy gradient.

503.14 Connections

No buildings shall be connected to a lateral unless the building is completely under roof. In the case of building demolitions, the existing connection shall be abandoned at the right of way or as determined by the Public Utilities Director or his/her designee. Any utility abandonment during redevelopment or demolition requires an inspection by the Public Works Department.

503.15 Protection of Water Supplies

There shall be no physical connection between a public or private potable water system and a sewer, or it's appurtenance that would permit the passage of any sewage into the potable water supply.

503.16 Parallel Installation

Sanitary sewers and manholes shall be laid a minimum of 10 feet horizontally from any existing or proposed water main. When local conditions prevent a

Attachment: 2020 Design, Construction, and Materials Specification Handbook (1575 : Design, Construction, and Materials Specification

separation of 10 feet, a sewer line may be laid closer than 10 feet to water main if it is laid in a separate trench. The sewer shall be laid lower than the water line, with a minimum of 18 inches below the invert of the water main. When it is impossible to obtain proper separation, the sewer pipe material shall be pressure rated at 150 psi and shall be pressure tested to assure water tightness.

503.17 Crossings

Whenever sewers must cross under water mains, the sewer shall be laid at such an elevation that the top of the sewer is at least 18 inches below the bottom of the water main. When the elevation of the sewer cannot be buried to meet the above requirement, the water main shall be relocated to provide this separation, or reconstructed with ductile iron pipe, that will withstand a 150 psi pressure test, for a distance of ten feet on each side of the sewer. One full length of water main pipe shall be centered over the sewer so that both joints will be as far from the sewer as possible.

504.00 LATERALS

504.01 Lateral Size

No gravity lateral sewer conveying wastewater shall be less than 6 inches. Laterals for low-pressure force main systems shall be sized according to the hydraulic design criteria.

504.02 Lateral Slope

The slope of the 6-inch pipe shall be not less than 1/4 inch per foot (2%), while maintaining a minimum vertical separation of 36 inches. A minimum vertical separation of 36 inches shall be required as measured from the crown of the public sanitary main and the lowest floor elevation served by gravity sewers. In any structure in which the plumbing is too low to permit gravity flow to the utility system, or private sewer, the sewage shall be lifted by artificial means and discharged into the utility system. When only the lower floor of a structure is too low for gravity flow, the remaining floors must flow by gravity. **See the Service Line Details drawing on Page 24 of the Standard Construction Drawings.**

504.03 Location

No sewer lateral shall be laid parallel to within 5 feet of any bearing wall, which might thereby be structurally weakened. A 2-inch-tall “S” shall be stamped on the curb face at all sewer lateral locations. **See the Utility Service Location Designation drawing on Page 11 of the Standard Construction Drawings.**

Attachment: 2020 Design, Construction, and Materials Specification Handbook (1575 : Design, Construction, and Materials Specification

504.04 Depth

The minimum sewer lateral cover depth shall be 36 inches from the crown of the lateral to afford protection from frost. The sewer lateral shall be installed on the low point of the property being served and shall be sufficiently deep to receive wastewater from basements. A minimum vertical separation of 36 inches shall be required as measured from the crown of the public sanitary main and the lowest floor elevation served by gravity sewers.

504.05 Alignment

The sewer lateral shall be laid at a positive uniform grade and in straight alignment. Changes in direction shall be made only with properly made curved pipe-fittings with no deflections greater than 45º permitted. The maximum connection angle shall be no greater than 60º degrees into the public main.

504.06 Tap Connections

The connection of a building lateral to an existing sanitary sewer shall be air and water tight in an acceptable manner. The standard connection shall utilize standard pipe-fittings or manufacturer's recommended adapter designed to join the type of pipes together. The connection from a 4-inch pipe to a 6-inch lateral shall be made by use of a commercial fitting only and within 5 feet of the building. Cement grout shall not be permitted. Building connections are not to be completed until the structure is under roof in order to prevent unnecessary inflow and infiltration. Connections to gutters, sump pumps, or pool drains will not be allowed.

The tap for truss pipe shall be accomplished by installing a manufactured wye fitting to prohibit any degradation of the interior truss lining void structure. Coring a hole for the tap may be completed at the discretion of the Public Utilities Director. For truss pipe tapping connections, a solid sleeve type coupling shall be used to add integrity and stiffness to the pipe at each connection.

A manufactured tap saddle of a high durometer PVC shall be used on sanitary pipe materials other than truss pipe. The tap saddle apron shall be installed by a solvent weld system, in addition to stainless steel slip-lock clamps around the saddle on the sanitary main pipe.
All connections within the sanitary sewer system shall be inspected and approved by the City of Fairfield before being covered. No sewer pipe laid underground shall be covered, or the trenches filled, until after the sewer has

Attachment: 2020 Design, Construction, and Materials Specification Handbook (1575 : Design, Construction, and Materials Specification

been inspected for workmanship and proper material. If the City of Fairfield refuses to approve the work, the plumber or owner must proceed immediately to correct the work.

504.07 Clean Outs

Clean outs to grade shall use a 4-inch minimum diameter riser capped with a 4- or 6-inch cleanout plug. Clean outs are required at every 100 feet or fraction thereof along all straight lines of pipe and at the discretion of the Public Utilities Director or his/her designee, at changes of direction of 45 degrees or more. Clean out installation should be avoided in traffic areas, however if such installation is required, materials shall be capable of bearing traffic weight. Clean outs caps constructed of plastic material in traffic areas shall be un-acceptable. In all cases, a 2-way cleanout is preferred, however, in some cases the Engineer and his/her designee may approve a directional cleanout or wye. **See the Two Way Cleanout drawing on Page 27 of the Standard Construction Drawings.**

504.08 Bedding

All sanitary sewer laterals shall be bedded in #8's, #9's or #57's gravel. The granular bedding shall extend to 12 inches above the top of the lateral. Any over-dig area shall utilize #57 gravel. Bedding shall have bell holes for joint shape and locations.

504.09 Backfilling Under Pavement

Flowable controlled density fill (Low Strength Mortar –LSM 50) shall be per ODOT 613 under the roadway and curb. Granular backfill item 304 may be used under private driveways. **See the Trench Detail drawing on Page 3 of the Standard Construction Drawings.**

504.10 Sewer Stubs

All sewer lateral stubs shall be capped with a watertight plug. Plug location shall be marked with a 2 x 4 stake, 12 feet long, with one end buried at depth of the plug invert and extending at least 3 feet vertically out of ground. The portion of the stake above the ground shall be painted green, marked with the word "SEWER" and indicate the depth from the pipe invert to the ground surface. Any new street curb, or curb replacement over the sanitary lateral shall be stamped with an "S" symbol to identify the approximate location of the sewer. **See the Utility Service Location Designation drawing on Page 11 of the Standard Construction Drawings.**

Attachment: 2020 Design, Construction, and Materials Specification Handbook (1575 : Design, Construction, and Materials Specification

504.11 Cured-In-Place Pipe (CIPP) Service Lateral Lining

The intent of this CIPP lateral lining specification is to provide reconstruction of service laterals without excavating the entire existing pipeline. The existing pipe reconstruction will be accomplished using a scrim reinforced liner tube measured to exact length and inside diameter utilizing a thermosetting resin that meets required physical and chemical resistance properties. The scrim reinforced liner will be impregnated with resin then loaded into an approved air pressure launching system. The liner will be aligned to the open end of the existing lateral pipe. Once the liner is aligned, the launching system will invert the resin-impregnated liner with air pressure. The inversion process is completed once the liner has fully inverted to the sewer main collection pipe, stopping at the connection. The inversion process must conform with ASTM F 1216. The liner will be open to allow the calibration tube to invert beyond the liner end at the sewer main connection. A calibration tube is then inverted into the liner holding the liner in place during the curing process. At no time will the calibration tube lose air pressure and be re-pressurized during the inversion process. The calibration tube will be sealed at the sewer main, holding air pressure to secure the liner against the existing host pipe until the liner is fully cured. After the resin-impregnated liner is fully cured, the calibration tube is removed. The sewer lateral collection pipe will be immediately televised for the inspector's approval. A copy of the televised inspection must be recorded digitally and provided to the City for future reference.

The liner tube will consist of scrim reinforcement and needled felt. The liner tube will be fabricated together using a butt-stitched seam sealing process with a heat welded sealing tape to ensure airtight seal. The liner tube will be capable of carrying resin and withstanding installation pressures and curing temperatures. The liner tube will be lined on one side with a translucent impermeable chemically resistant polyvinylchloride (PVC) water proof coating. This coating will be on the inner lateral collection lined pipe after curing is completed. The coating will provide a smooth and seamless inner wall.

The resin will be a two-part, 100% solids epoxy containing no styrene. The epoxy resin shall be formulated to have a gel (pot) life of approximately 30 minutes with a set cure time of three hours. The epoxy shall ambient cure by internal exothermic chemical reaction.

The scrim reinforced / seam stitched / heat welded seam tape / felt liner tube and resin will upon installation meet and/or exceed minimum testing standards as

Attachment: 2020 Design, Construction, and Materials Specification Handbook (1575 : Design, Construction, and Materials Specification

required by ASTM, IAPMO and ANSI/NSF International. All materials must have 3rd party testing provided by independent laboratory. The materials must be ANSI/NSF Standard-14 and IAPMO Certified for small diameter pipe lining in Sewer Pipes and Vents. The scrim reinforced / seam stitched / heat welded seam tape / felt liner tube and resin must have NSF Standard 14 denoted on the tube.

a) The Contractor must have a valid City of Fairfield Sewer Tapper License in addition to being a certified CIPP installer with proof of certification.

b) The Contractor shall supply plans to the Director of Public Utilities or designee five days prior to construction. The Contractor will arrange for work to be inspected by the City Inspector prior to construction.

c) The owner shall be notified 24 hours in advance of project start time. No building utilities, such as toilets, sinks, dishwasher, laundry washer, bath tubs, or sump pumps will be used during the installation and curing process.

d) Lateral sewer collection pipe must be cleaned thoroughly prior to installation of liner. All sand, rocks, gravel, grease, mud, sludge, and other debris must be removed from the invert to permit proper installation. Roots must be removed to the extent necessary to effectively line the entire pipe to the main.

e) The existing service lateral will be inspected using a mini-television color camera system capable of viewing the interior condition of the host pipe. The TV inspection must be performed within 5 hours prior to installation of liner tube and be provided to the homeowner and City.

f) The resin-impregnated liner tube will be kept clean and loaded directly into the air pressured launching system. The launching system will be aligned to the existing host pipe for proper installation.

g) The resin shall not be contaminated and/or diluted prior to installation.

h) The liner tube shall be inverted using air pressure, inverting the liner inside-out until the liner tube reaches the sewer main collection pipeline. The liner tube will be open and not sealed off. The liner tube will be designed to fit tightly against the host pipe annular space and gaps. A calibration tube will be inverted inside the liner tube to ensure the liner is tight against the host pipe until fully cured. The resin-impregnated liner tube will cure within 4 hours without external heat sources.

i) Once the curing process is finished, the calibration tube shall be removed and the lateral sewer collection pipe immediately inspected for final acceptance. The new lined pipe shall be free of any foreign objects providing a smooth, seamless and continuous lined pipe from entry point to main sewer connection pipe.

j) Any liner tube protruding from the lateral sewer collection pipe into the main sewer pipeline must be removed by remote robotic cutting equipment.

k) If the liner/repair contacts or affects the city sewer main in any manner, the contractor is solely responsible and must repair the main to meet city standards.

l) A final TV Inspection of the lined pipes will be recorded and provided to the owner and City for final approval.

Required Cured-In-Place Lateral Lining Standards

Flexural Strength	ASTM D-790	4,500 PSI (min.)
Flexural Modulus	ASTM D-790	250,000 PSI (min.)
Tensile Strength	ASTM D-638	3,000 PSI (min.)
Compressive Strength	ASTM D-695	4,000 PSI (min.)
Tensile Elongation	ASTM D-638	5 PSI (min.)
Chemical Resistance	ASTM D-543	>20% loss
Leakage Test*	NSF Standard 14	0/gal/in/day

*Leakage test performed by ANSI/NSF International

Manufacturer must have United States based manufacturing headquarters. The manufacturer must have at least five years of manufacturing / supplying CIPP Air Inversion Liner Tube and Materials. The manufacturing plant has a Quality Assurance / Quality Control program in place and overseen by NSF International and IAPMO R&T Laboratories.

505.00 SEWER MAIN PIPE MATERIALS

505.01 Force Main and Gravity Sewers

All materials for sewer pipe shall be new and furnished by the Contractor. The Manufacturer and Contractor shall use equipment and methods adequate to protect pipe, joint elements, and coatings from damage during hauling, storage and handling. When there is reasonable doubt as to the structural strength or water tightness of damaged sections, those sections shall be rejected and replaced

Attachment: 2020 Design, Construction, and Materials Specification Handbook (1575 : Design, Construction, and Materials Specification

at the Contractor's expense. Any proposed deviations from these listed, or specified materials must first be approved by the City of Fairfield, Director of Public Utilities, or his/her designee. The force mains and sewers shall be constructed to the alignment and inverts shown on the construction plans, and of the size and type shown or specified.

A manufacturer's certificate that the material was manufactured and tested in accordance with the appropriate ASTM specification shall be furnished to the City of Fairfield prior to the installation of pipe.

PVC or HDPE pipe shall not be used in industrial areas where the effluent is detrimental to the integrity of the pipe. The Director of Public Utilities, or his/her designee, may request analytical data on the proposed industrial discharge. Any cost for the analysis will be encumbered by the contractor. The Director of Public Utilities, or his/her designee, shall make a determination on what type of pipe should be used based upon industrial sampling.

No sewer shall exceed 25 feet in depth without the approval of the City of Fairfield, Director of Public Utilities, or his/her designee.

All materials not specifically referenced shall comply with applicable sections ASTM, AWWA, APWA, GLUMRB, or ODOT standard specifications.

505.02 High Density Polyethylene Pipe (HDPE)

HDPE pipe material may be considered for force mains and service laterals only. All material shall be manufactured from a PE 4710 resin listed with the Plastic Pipe Institute (PPI) as TR-4. The resin material shall meet the specifications of ASTM D 3350 with a minimum cell classification of 445474C. HDPE pipe and fittings shall contain no recycled compounds except that generated in the manufacturer's own plant from resin of the same specification from the same raw material. HDPE products shall be homogeneous throughout and free of visible cracks, holes, foreign inclusions, voids, or other injurious defects. The polyethylene compound shall be suitably protected against degradation by ultraviolet light by means of carbon black of not less than 2 percent. The manufacture of the HDPE resin shall certify the cell classification indicated. Pipe sizes 3 inches and larger shall have a manufacturing standard of ASTM F 714, while pipe smaller than 3 inches shall be manufactured to the dimensional requirements listed in ASTM D 3035. Dimension Ratio (DR) and Outside Diameter (IPS/DIPS) shall be as specified on plans. Pipe shall meet AWWA C901 (1/2" to 3") or AWWA C906 (4" to 63"), and shall be listed as meeting

NSF-61. HDPE pipe shall be either black in color or black with green stripes. Butt fusion shall be performed per manufacturer's recommendations. The Inspector shall have the right to test butt-fused joints at least once per day when butt fusion is being performed. Electro-fusion may be performed only when approved by the Public Utilities Director of his/her designee. A minimum 12 ga. tracer wire shall be installed with all HDPE pipe with the ends terminating in a test box or structure to allow easy access for locating equipment connections.

505.03 PVC Pipe

PVC pipe shall conform to ASTM D 3034-08 or current standard. PVC gravity sewer pipe may be installed according to manufacturer's recommendations except for the conditions noted on the following table:

PVC Gravity Pipe	Depth (feet)
SDR 35	3-14 feet
SDR 26	15-19 feet
SDR 21	20-25 feet

505.04 Ductile Iron Sewer Pipe

All ductile iron shall conform to ANSI/AWWA C150 /A21.50-08 or current standard. In no case shall the pipe be less than Class 53 (Ductile Iron Wall Thickness). The lining and coating for ductile iron pipe and fittings shall be cement mortar lined with bituminous seal coat conforming to ANSI/AWWA/C104 A/21 or current standard.

The fittings for ductile iron pipe shall be mechanical and shall conform to ANSI/AWWA/C111 A/21 or current standard. All ductile iron pipe shall bear the manufacturer's name or trademark, the year produced, and the letter's "DI" or word "Ductile". The Ductile Iron lining/coating system shall be impervious to sewer gases and waste (Protecto 401, or approved equal.). A Polyethylene Encasement conforming to AWWA C105 shall be utilized when ductile iron pipe is installed.

505.05 Deflection of Pipe

The deflection of pipe diameter shall not exceed 5 percent. Installed pipe shall be tested 30 days or more after trench has been back-filled to the finished grade.

Attachment: 2020 Design, Construction, and Materials Specification Handbook (1575 : Design, Construction, and Materials Specification

Test is to be scheduled and performed by the Developer or Contractor, under supervision by the City of Fairfield.

505.06 Joints

PVC pipe joints can be solvent-welded and conform to ASTM D2680-01 or current standard or elastomeric gasket joints which shall conform to ASTM D 3212-07 or current standard. Joints recommended for circular sewers where infiltration or exfiltration is a factor in design shall use flexible watertight joints using compression type rubber gaskets for sealing the joint, and shall conform to ASTM C443 or current standard. Sewer joints shall be premium joints, and shall be designed to minimize infiltration and to prevent entrance of roots. In all jointing operations, the trench shall be dry before making pipe joints. All surfaces to be joined and all parts of the joint shall be clean.

505.07 Concrete Encasement

In areas requiring concrete encasement, Ductile Iron Class 53 with poly wrap (refer to 505.04) shall be used unless waived by the Director of Public Utilities, or his/her designee. Concrete encasement is required where sanitary sewers cross under streams, drainage swales, points of heavy loading, or at other locations as directed by the City of Fairfield. Concrete encasement shall completely surround the pipe and shall have a minimum thickness at any point of 1/4 of the outside diameter of the pipe, or a minimum of 6 inches, whichever is greater. In addition, 4 reinforcing bars of a size selected by the inspector shall be evenly spaced around the pipe, and have a length equal to that of the encasement. The concrete encasement shall be designed to provide the necessary addition strength. **See the Gravity Sewer Creek Crossing drawing on Page 28 of the Standard Construction Drawings.**

505.08 Casing Spacers and Insulators

Field adjustable casing spacers shall be ISO-9001 certified and used to center, or adjust the position and elevation of the gravity sewer pipe to on-grade requirements within the casing. An appropriate end-seal shall be used on the encasement as recommended by the manufacturer or approved by the inspector.

Attachment: 2020 Design, Construction, and Materials Specification Handbook (1575 : Design, Construction, and Materials Specification

506.00 MANHOLES

506.01 Manholes

Manholes shall be installed in accordance with the City of Fairfield Sanitary Sewer Standard Construction Drawings and shall not be spaced further apart than 400 feet. Manholes shall conform to ASTM C478-12a or current standard for precast reinforced concrete manhole sections. In traffic load bearing conditions, manholes shall conform to AASHTO M199 or current standard. Pre-cast reinforced concrete manholes shall be constructed with use of Xypex C-1000, or approved equal, at the discretion of the Public Utilities Director. In addition, all pre-cast reinforced concrete manholes shall include the sidewall rings and base. The cone shall be of the eccentric type. Manhole joints shall be sealed with flexible watertight rubber gaskets conforming to ASTM C900, C443 or current standard. Prior to backfilling, 12-inch-wide rubber external seal wraps or approved equal shall be applied to each manhole section joint in accordance with ASTM C877 (Type III – Chemically-Bonded Adhesive Butyl Bands) or current standard. At points of pipe inlet, the pre-cast base manhole shall contain a wedge lock, or flexible O-ring joint conforming to ASTM C-923-08 or current standard. "Resilient Connections" to ensure the prevention of shearing the pipe due to differential settling. Grouted joints between sections and cast-in-place bases are not acceptable.

Pipe material changes between manholes shall not be permitted.

506.02 Manhole Castings

Manhole castings shall be made of cast iron, and conform to AASHTO M199 or current standard or Low-Density Traffic H-20 Loading to support traffic, or current standard. The manhole frame/lid shall be East Jordan 00160062 (Solid)/0016026 (Vented) or Neenah 1767-2001 Frame with 1767-5027 Cover (Solid)/1767-5023 (Vented) and have "SANITARY SEWER" factory cast into the lid. Water- tight manhole covers are to be used wherever the manhole covers may be flooded by street run-off, or predicted high water conditions. Water- tight covers shall be East Jordan 00104509 or Neenah R 1916-F. Vented Manhole covers shall be permitted only if the manhole, and sanitary system has high-pressure fluctuations and requires pipe venting. Vented lids shall have a maximum of (4), 1-inch ventilation holes and be utilized only in unpaved areas or when the elevation of the vented cover is above the surrounding ground elevation. Steps inside the manhole shall be polypropylene encapsulated steel spaced a minimum of 12 and a maximum of 16 inches apart. The standard base shall be precast by the manufacturer.

Attachment: 2020 Design, Construction, and Materials Specification Handbook (1575 : Design, Construction, and Materials Specification

Attachment: 2020 Design, Construction, and Materials Specification Handbook (1575 : Design, Construction, and Materials Specification

506.03 Manhole Installation

Manholes shall be installed plumb. Whenever possible, the height of the manhole sections shall be selected in order to allow the manhole casting to be set directly on the top cone at the required elevation, rather than using pre-cast grade rings. In areas where the manholes are located in streets, the casting and cover shall be installed at the same grade as the street with use of pre-cast grade rings. Pre-cast grade rings may be utilized to adjust grade levels to a maximum of 16 inches. No more than 3 pre-cast grade rings may be utilized for grade adjustment.

The minimum diameter of the manhole shall be 48 inches and shall conform to the requirements of ASTM C478-12a or current standard. A minimum access opening of 22 inches shall be provided. Manholes shall be installed at the end of each sewer line, or service lateral having a length greater than 150 feet, at all changes in grade, size, alignment, and at all pipe intersections. Manholes shall also be installed at a spacing distance not greater than 400 feet for main sewers. The locating of a manhole in a sidewalk shall be avoided whenever possible. Private sewer systems must be separated from the City sewer systems by a manhole located at the right-of-way line.

Manholes installed in flood plains shall extend 2 feet above the 100-year flood elevation, and shall have an internal rubber seal installed to seal the frame-chimney joint area. Seals must be provided with the initial sleeve and extensions on the installation of manholes with multiple adjusting rings. The full chimney section, between the frame and cone section shall be open. Expansion bands are required at such intervals to ensure a complete rubber seal. A sleeve or boot shall have a vertical height of 12 inches and be capable of expanding 2 inches.

All resilient connectors, boots and sleeves between the reinforced concrete manhole structure its pipes and laterals shall conform to ASTM C-923-08 or current standard.

506.04 Drop Inlets

Drop inlets shall be avoided whenever possible. When approved, a drop pipe shall be provided for a sewer entering a manhole at an elevation of 24 inches or more above the manhole invert. Drop manholes shall be constructed with an outside drop connection. Inside drops shall only be used when tying into any existing sewer main, and requires approval by the Director of Public Utilities, or his/her designee. Where the difference in elevation between the incoming sewer and the manhole invert is less than 24 inches, the manhole bench or flow channel

shall be modified to prevent solids deposition. **See the Drop Manhole drawing on Page 33 of the Standard Construction Drawings.**

506.05 Flow Channel

The flow channel shall be straight through the manhole, and shall be made to conform in shape, slope and smoothness to that of the sewers. Flow direction changes in excess of 90 degrees will not be permitted. The channel walls should be formed or shaped to the full height of the crown of the outlet sewer in such a manner to not obstruct maintenance, inspection or flow in the sewers. A bench shall be provided on each side of the flow channel when pipe size is less than manhole diameter. No lateral sewer or drop manhole pipe shall discharge onto the surface of the bench. The bench shall slope one inch per foot.

506.06 Control and Inspection Manholes

All industrial dischargers shall provide for an on-site monitoring manhole. All discharge from the property must pass through one control manhole before entering the City of Fairfield sewer system. Control manholes are manholes through which all flow from a single user passes. Inspection manholes are manholes with additional monitoring features to allow for routine sampling of a user's wastewater discharge.

The City of Fairfield requires that a control manhole be installed for any new or changed industrial unit. The Public Utilities Director may require the user to install monitoring and/or flow measuring equipment as necessary. The facility's sampling and monitoring equipment shall be maintained at all times in a safe and proper operating condition by the user at its own expense. The Director or his designated agent(s) shall have the right to enter the premises of any user to determine whether the user is complying with the requirements of the wastewater discharge permit, or order issued hereunder.

Users shall allow the Director ready access to all parts of the premises for purposes of inspection, sampling, records examination and copying, and the performance of any additional duties. Information and data on a user obtained from reports, surveys, wastewater discharge permit applications, and monitoring programs from the Director's inspection and sampling activities shall be available to the public without restriction, unless the user specifically requests, and is able to demonstrate to the satisfaction of the Director, that the release of such information would divulge information, processes, or methods of production entitled to protection as trade secrets under applicable State law.

Attachment: 2020 Design, Construction, and Materials Specification Handbook (1575 : Design, Construction, and Materials Specification

506.07 Manhole Inspections

Sanitary Sewer manholes will be inspected in the field for visual damage and water tightness. All manholes shall be vacuum tested by the contractor prior to acceptance using testing procedures described in 508.02. The vacuum test method shall demonstrate the integrity of the installed materials.

507.00 TRENCHING AND EXCAVATION

507.01 Protection of Underground Utilities

The accuracy of location of existing underground utilities as shown on plans is not guaranteed. It shall be the duty of the Contractor to locate these utilities in advance of excavation, and to protect same from damage after uncovering. The Contractor shall contact the owners of the utilities for assistance in locating these service lines. The Contractor shall contact the Ohio Utilities Protection Service (1-800-362-2764 or 811), (ohio811.org) at least 48 hours in advance of digging. Any expense incurred by reason of damaged or broken lines shall be the responsibility of the Contractor. **For Separation of Water Mains and Sewers, see Section 406.01.**

507.02 Installation

No trenching or laying of pipe, and fittings shall be done until grade stakes have been set. The Contractor shall use digging equipment that produces an even bedding and foundation on which the pipe and fittings shall be installed. The bottom of the trench shall be level and free from lumps, holes, excessive loose dirt and large stones. The bottom of the trench base shall be undercut 6 inches, and then back filled with #8's, #9's or #57's gravel. The bottom of the trench shall be accurately graded to provide uniform bearing and support for each section of pipe. Support of pipe shall be given at every point along its entire length, except to excavate for bell holes and joints. Allowing the pipe to be bridged by the bell or joint end is unacceptable. The trench shall be excavated to the depth required to provide a uniform and continuous bearing support for the pipe on solid and undisturbed ground at every point between joint ends.

All sanitary sewers shall have minimum cover of 36 inches. The open trench ahead of pipe-laying shall be kept to a minimum, and shall not be in excess of 25 feet at the end of the working day, or the ceasing of work.
Open cut trenches and excavations shall be sheeted and braced as required by OSHA standards and municipal ordinances, and as may be necessary to protect life, property, the project, or as ordered by the project engineer or inspector. To

Attachment: 2020 Design, Construction, and Materials Specification Handbook (1575 : Design, Construction, and Materials Specification

protect the persons from injury, and to avoid property damage, adequate barricades, construction signs, torches, red lanterns, and guards shall be placed and maintained as required during the progress of the construction until it is safe.

All grading in the vicinity of a trench excavation shall be controlled to prevent surface water from flowing into the trench. Any water accumulating in the trench shall be removed by pumping or other approved method. Material excavated from the trench shall be stacked in an orderly manner and a safe distance away from the trench edge. The project inspector will have the contractor remove materials unsuitable for backfilling.

The Contractor shall notify the City 24 hours in advance of the location and time that the Contractor intends to work. Any unauthorized excavation below the grade shall be backfilled at the Contractors expense with controlled fill. For public and private work within the City's Right-of-Way, the contractor performing the work is required to restore any disturbed areas in the Right-of Way within 48 hours after the completion of the work.

All trenching, grade and cover work shall conform to the lines and grades given by the engineer. Work shall be done according to the drawings and specifications; subject to such modifications as the City of Fairfield may determine necessary during the project period.

***Allowable Removal of Pavement,* see Section 408.02**

***Trenchless Methods,* see Section 408.03**

***Protection of the Public*, see Section 408.04**

507.03 Pipe Installation

Proper facilities shall be provided for stringing and lowering sections of pipe into the trench. The pipe shall be installed in accordance to the active standard ASTM D2321-05 for underground installation of buried thermoplastic pipe for sewers and other gravity-flow applications.

Existing sanitary sewer lines and flow shall remain in operation at all times. Any rerouting or blockage of sewer lines during construction by the Contractor shall require prior approval by the Director of Public Utilities, or his/her designee.

Pipe laying shall begin at existing sewer locations and shall proceed upgrade with the bell or groove end of the pipe placed upstream. The interior of the pipe shall be kept free from dirt, excess mortar and other foreign material as the

Attachment: 2020 Design, Construction, and Materials Specification Handbook (1575 : Design, Construction, and Materials Specification

laying progresses. Pipe shall not be laid when the condition of the trench or the weather is unsuitable, or when water or mud may interfere with proper joining. All open ends of pipe and fittings shall be adequately and securely closed whenever the work is discontinued. Any pipe, which shows undue settlement or is damaged shall be taken up and replaced at the Contractor's expense.

507.04 Laser System

The Contractor shall furnish and use, for grade and alignment control, a laser beam system, which complies with OSHA requirements. The laser system is to be provided by the Contractor, and shall have a minimum accuracy of 0.01 foot per 100 feet on line; and a minimum visible range of one thousand 1000 feet.

The battery for the laser device should be located far enough from the manhole or sewer pipe to ensure that it will not act as an ignition source for explosive hazards originating in the excavation or in existing sewer lines. When laser alignment is impractical, such as short pipe runs, the Contractor shall have a professional surveyor on site to set grade verify the installation of each pipe joint.

508.00 TESTING

508.01 Testing Requirements of Gravity Sewers

All completed piping shall be tested as specified herein by low-pressure air test, exfiltration, or infiltration test prior to backfilling to test for leaks. The maximum leakage allowance for all sanitary sewers shall be 50 gallons per inch diameter per mile of pipe per 24 hours. If the level of the current prevailing groundwater is two feet or more above the top of the sewer pipe, an infiltration test will be required. At the request of the Inspector, a low-pressure air test or exfiltration test will be performed instead of or in addition to an infiltration test if the ground water level is uncertain. Labor, equipment and supplies required for all tests shall be furnished by the Contractor. The Contractor shall flush and clean the sewer line to the satisfaction of the Inspector prior to testing. The Inspector shall witness and approve all leakage tests. In the event the Contractor performs any test without witness by the Inspector, the Contractor will be required to test the section again at no cost to the City. The Contractor and Inspector shall sign all test reports. Note that only four sections (approximately 1,200 – 1,600 feet) of sewer will be permitted to remain untested at any time.

Attachment: 2020 Design, Construction, and Materials Specification Handbook (1575 : Design, Construction, and Materials Specification

a) Low-Pressure Air Test:

The air test shall be conducted between two consecutive manholes. Low pressure air tests shall be in accordance with ASTM C 924-02, or current standard, for concrete pipe or ASTM F 1417-11a, or current standard, for plastic pipe, except as specified by the Director of Public Utilities or his/her designee, herein. All pipe outlets must be plugged in the section being tested with suitable test plugs. One of the plugs used at a manhole must be tapped and equipped for an air inlet connection for filling the line from the air compressor.

Air shall be supplied slowly to test section until the internal pressure reaches approximately 4 pounds per square inch (psi). At least 2 minutes shall be allowed for the air pressure to stabilize. When the pressure has stabilized and is at or above 3.5 psi, the air supply shall be disconnected and timing shall begin. Timing shall continue until the pressure has dropped 1.0 psi. If the time elapsed before the pressure drops 1.0 psi is greater than the specified minimum holding time, the section shall be considered to have passed the test. If the time is less than the specified minimum holding time, the section shall be considered to have failed and must be repaired or replaced.

Minimum holding time shall be calculated from the following equation:

Holding Time (minutes) = $0.00037 \times D^2 \times L / Q$

where D = Pipe Diameter (inches)
L = Length of Pipe Tested (feet)
Q = Allowable Air Loss (ft3/min) from Table: Minimum Holding Time for Low Pressure Air Test

An air pressure correction is necessary when the current prevailing groundwater is above the invert of the sewer line being tested. Under this condition, the air test pressure shall be increased 0.433 psi for each foot the groundwater level is above the invert of the pipe. All gauge pressures shall be increased by this amount. If the current prevailing groundwater is more than 24 inches above the invert of the pipe, the infiltration or exfiltration test should be used as required above. Thus, internal air pressures should never exceed 5.0 psi.

Minimum Holding Time for Low Pressure Air Test

Nominal Pipe Size, (Inches)	Time per 100 feet
6	42 seconds
8	1 minute – 12 seconds
10	1 minute – 30 seconds
12	1 minute – 48 seconds

15	2 minutes – 6 seconds
18	2 minutes – 24 seconds
21	3 minutes
24	3 minutes – 36 seconds
27	4 minutes – 12 seconds
30	4 minutes – 48 seconds
33	5 minutes – 24 seconds
36	6 minutes

Allowable Air Loss for Low Pressure Air Test

Nominal Pipe Size (Inches)	Air Loss (Q), $ft^{3/}$min
6 and 8	2
10	2.5
15	3
15	4
18	5
21	5.5
24	6
27	6.5
30	7
33	7.5
36	8
42	9
48	10
54	11
60	12
66	13
72	14

b) Infiltration Test:

The Contractor may elect to use an infiltration test when the level of the current prevailing groundwater is 2 feet or more above the top of the sewer pipe, including all service laterals, at the highest point of the section being tested. The inlet end(s) of the upstream manhole shall be securely sealed. The downstream sewer shall be completed and open to allow the sewer to drain. The Inspector shall approve the length of sewer to be tested at one time. The Inspector may require that each manhole span be tested separately. The amount of infiltration shall be measured by means of a weir located in the downstream manhole. The test head shall be maintained for a period of at least 24 hours before the weir measurement is made. Infiltration shall not exceed 50 gallons per inch diameter per mile of pipe per 24 hours. This infiltration test may not be performed until the sewer line and manholes are completed and all known leaks are repaired. The Contractor will be required to correct all conditions that permit visible

Attachment: 2020 Design, Construction, and Materials Specification Handbook (1575 : Design, Construction, and Materials Specification

infiltration and may be required to relay sections with such conditions that cannot be corrected, even though infiltration is within allowable limits.

c) Exfiltration Test:

When the exfiltration test is selected, the inlet ends of the upstream and downstream manholes shall be sealed with watertight plugs or bulkheads, and the sewer along with the upstream manhole shall be filled with water until the elevation of the water in the upstream manhole is: 1) two feet higher than the top of the sewer pipe, including all service laterals, at the highest point of the section being tested, or 2) two feet above the level of the current prevailing groundwater, whichever is the higher elevation. The test level shall be clearly marked in the upstream manhole. The entire length of section to be tested shall be filled and maintained full of water for a period of at least 24 hours prior to the start of the test. If the water level in the upper manhole drops during this 24-hour period, the level shall be raised to the test level mark prior to start of the test. Exfiltration will be determined by measuring the amount of water required to maintain the marked water level for a period of 1 hour from the start of the test. The allowable leakage of 50 gallons per inch diameter per mile of pipe per 24 hours based on a maximum difference in elevation of 8 feet between the water level in the upstream manhole and the invert of the pipe being tested in the lower manhole or the current prevailing groundwater level, whichever is higher. If this difference in elevation exceeds 8 feet, the allowable leakage shall be increased 5 percent for each 1 foot in excess of 8 feet. All observed leaks shall be corrected even if exfiltration is within the allowable limits.

508.02 Vacuum Testing of Manholes

This specification shall govern the vacuum testing of sanitary sewer manholes and structures and shall be used as a method of determining acceptability by the Director of Public Utilities, or his/her designee, in accepting maintenance of a sanitary sewer manhole or structure on behalf of the public. Vacuum testing shall be according to ASTM C1244-11, or current standard, except as specified otherwise herein. Other forms of testing of some manholes may be required, as deemed necessary by the Director of Public Utilities.

All manholes related to a project are subject to vacuum testing. Manholes to be tested shall be selected by the Inspector at the time of testing. No advance notice will be provided to the Contractor as to which manholes will be tested.

Manholes shall be tested after installation with all connections in place.

Attachment: 2020 Design, Construction, and Materials Specification Handbook (1575 : Design, Construction, and Materials Specification

a) Drop connections shall be installed prior to testing.

b) The vacuum test shall include testing of the seal between the cast iron frame and the concrete cone, slab or grade rings.

c) If a coating or lining is to be applied to the interior of the manhole the vacuum test must not be performed until the coating or lining has been cured according to the manufacture's recommendations.

d) If existing manholes are to be vacuum tested (e.g. in the case of a sewer rehabilitation project), the Inspector and Contractor must deem the manhole structurally sound prior to vacuum testing.

Procedure for testing shall be as follows:

a) Temporarily plug all pipes entering the manhole. Each plug must be installed at a location beyond the manhole/pipe gasket (i.e. outside the manhole wall), and shall be braced to prevent the plug or pipe from being drawn into the manhole.

b) The test head shall be placed on the rim of the cast iron frame at the top of the manhole, in accordance with the manufacturer's recommendations.

c) A vacuum of at least 10 inches of mercury (10" Hg) shall be drawn on the manhole. Shut the valve on the vacuum line to the manhole and shut off the pump or disconnect the vacuum line from the pump.

d) The pressure gauge shall be liquid filled, having a 3.5-inch diameter face with a reading from zero to thirty inches of mercury.

e) The manhole shall be considered to pass the vacuum test if the vacuum reading does not drop more than 1" Hg (i.e. from 10" to 9" Hg) during the following minimum test times.

MH Depth(feet)	4' Diameter MH	5' Diameter MH	6' Diameter MH
15 Feet or less	50 sec.	1 min. 5 sec.	1 min. 20 sec.
15.01 to 30 Feet	1 min. 20 sec.	1 min. 45 sec.	2 min. 10 sec.

f) If any manhole fails the vacuum test, the manhole shall be repaired with a non-shrinkable grout or other material or method approved by the Director of Public Utilities or his/her designee. The manhole surfaces shall be properly prepared prior to any repairs. Once the repair material

Attachment: 2020 Design, Construction, and Materials Specification Handbook (1575 : Design, Construction, and Materials Specification

has cured according to the manufacture's recommendations the vacuum test shall be repeated. This process shall continue until a satisfactory test is obtained.

g) All temporary plugs and braces shall be removed after each test.

508.03 Deflection of Pipe

The deflection of pipe diameter shall not exceed 5 percent. Installed pipe shall be tested 30 days or more after trench has been back-filled to the finished grade. Test is to be scheduled and performed by the Developer or Contractor, under supervision by the City of Fairfield.

508.04 Closed Circuit Television (CCTV)

All new sanitary sewer extensions shall be inspected with the City of Fairfield Wastewater Division's CCTV equipment prior to acceptance. The sanitary laterals may also require additional CCTV camera inspection as a condition of acceptance. All construction must be completed and approved by the inspector prior to the CCTV inspection. The sewer lines and manholes shall be cleaned before the inspection process. A camera inspection will be performed after the Air test of the sanitary system(s). Additional CCTV inspections shall be performed when warranted.

The contractor shall bear all costs for correction of deficiencies found during the CCTV inspection, including the cost for additional CCTV camera inspection(s) to verify the correction of deficiencies.

No performance bond shall be released until a CCTV inspection has been performed, and the sanitary work has been approved for quality assurance by the City of Fairfield. The City of Fairfield may also CCTV inspect the sewer lines prior the expiration of any warranty, or again before final acceptance of a subdivision or other project as necessary.

If an unsatisfactory condition is found, that condition shall be presumed to have been caused by defective workmanship, or materials. The Contractor shall be directed to correct the work in a manner as approved by the City of Fairfield Wastewater Division.

Attachment: 2020 Design, Construction, and Materials Specification Handbook (1575 : Design, Construction, and Materials Specification

508.05 Testing Requirements for Force Mains

A hydrostatic pressure test at 150 psi for at least 2 hours shall be performed. All tests will be conducted in accordance with the hydrostatic testing requirements of AWWA C600, or current standard, on all force mains and service laterals. Pressure shall be measured at low point on section of pipelines. The contractor shall furnish all gauges, meters, pumps and other equipment required and shall maintain said equipment for accurate testing.

If the pressure drops more than 5 psi or the leakage is greater than allowable as determined by the formula in AWWA C600, or current standard, the test shall be considered failed. Common force mains shall be tested after all air release valves, flushing installations, and other appurtenances have been installed and with all service laterals installed at least to the curb stop. Private force mains and service laterals (on the pump side of the curb-stop) shall be tested after the entire system is completely installed (except for the connection to the gravity sewer, when applicable).

An Occupancy Permit shall not be issued until the sanitary sewers are tested and accepted by the City of Fairfield. See section 511.00 for building permits and occupancy.

509.00 FAT, OIL, AND GREASE PREVENTION

509.01 Fat, Oil, and Grease (FOG), Waste Food, and Sand Interceptors

FOG, waste food, and sand interceptors shall be installed when in the opinion of the City of Fairfield they are necessary for the proper handling of liquid wastes containing fats, oils and grease, ground food waste, sand, soils, or other harmful ingredients in excessive amounts, which impact the wastewater collection system. All interceptors shall be of a type and capacity as approved by the City of Fairfield, or the Butler County Department Water and Sewer (BCWS) as the governing jurisdiction requires. In general, the interceptor shall be designed to meet the Plumbing and Drainage Institute (PDI) standards.

New construction and renovation of food service establishments shall be required to install adequately sized grease interceptors necessary to maintain FOG compliance. All car washes, truck washes, garages, service stations, laundries, airport facilities, and other sources of sand, soil and oil shall have effective sand, soil and oil interceptors installed.

Attachment: 2020 Design, Construction, and Materials Specification Handbook (1575 : Design, Construction, and Materials Specification

Oil and grease interceptors shall be constructed of impervious materials capable of withstanding abrupt and extreme changes in temperature. They shall be of substantial construction, watertight, and be equipped with easily removed covers, which when bolted in place shall be gas tight and waterproof. The interceptor shall be installed at a location where it can be easily accessed for inspection, cleaning, and removal of accumulated grease and installed as close as possible to the source of the FOG laden hot water. Access manholes, with a minimum diameter of 22 inches shall be provided over each grease interceptor chamber. The access manhole shall extend to finished grade and be designed and maintained to prevent water inflow or infiltration. Grease interceptor sizing shall be a minimum of 1000 gallons, and meet the PDI design guidelines.

Where installed, all oil, grease and sand interceptors shall be maintained by the owner at his expense while providing continuous operation at all times. The owner shall maintain a yearly maintenance logbook subject to the review by the Director of Public Utilities, or their agent(s). The owner shall provide for the proper removal and disposal of the captured material. Grease interceptors shall be fully pumped out and cleaned at a frequency such that the combined FOG and solids accumulation does not exceed 25% percent of the total design hydraulic depth of the grease interceptor.

All food service establishments shall pump out and fully clean the grease interceptor every 90 days or less. Permits for the hauling and disposal of this material must be secured from the Butler County Health Department.

510.00 GRINDER PUMPS AND LOW-PRESSURE FORCE MAINS

510.01 Grinder Pumps and Low-Pressure Force Main Systems

In developments where first-floor gravity service can be provided, but basements cannot be served by gravity, individual grinder pumps will be permitted to provide basement sewer service. In this event, gravity sewers shall be installed throughout the development such that each building can be provided with first-floor-only gravity sewer service.

The lowest level serviced by a gravity sewer shall be a minimum of 3 feet above the top of the receiving sewer at the point of connection. If the minimum separation cannot be achieved, then an on-site individual sanitary grinder pump system is required. No public or shared force mains will be permitted where first-floor gravity service can be provided.

Attachment: 2020 Design, Construction, and Materials Specification Handbook (1575 : Design, Construction, and Materials Specification

The installation of grinder pump systems creates an ongoing operation and maintenance expense for the property owners and transfers the burden of extending off-site trunk sewers to the City of Fairfield and its sewer customers (existing and future).

It is the goal of the City of Fairfield Public Utilities Department to provide for the conveyance of wastewater by natural gravity flow wherever, and whenever possible.

510.02 Complete System Design Requirements for Low-Pressure Mains

Plans shall be consistent with a complete system design submittal which shall be approved by the pump manufacturer and submitted to the City of Fairfield's Department of Public Utilities for approval.

The complete system design shall include:

a) Numbers of properties served by each force main and force main branch.

b) Type of occupancy and anticipated flow rate for each property.

c) Development sequence and timetable.

d) Design flows (average, daily peak, instantaneous peak etc.).

e) Grinder pump system manufacturer and model number(s). Include catalog cut sheets, pump curve(s), and a description of system features.

f) Small scale sketch of entire pump system, including pump locations and elevations; location and direction of flow for each individual force main/service lateral, and each common force main or branch; location and elevation of discharge point(s); locations and elevations of any high points in the system. Each branch or zone shall be identified on the sketch with a unique branch number. Branches/zones shall be divided as described below.

g) Table indicating the following information for each branch-zone to include:
    1) Branch number.
    2) Number of pumps connected directly to the branch.
    3) Accumulated total number of pumps connected directly or indirectly.
    4) Maximum daily flow in branch.

Attachment: 2020 Design, Construction, and Materials Specification Handbook (1575 : Design, Construction, and Materials Specification

5) Pipe size.
6) Maximum daily velocity in branch.
7) Length of branch.
8) Friction loss in branch per Hazen Williams with C 120.
9) Accumulated friction loss.
10) Maximum force main elevation (between branch and discharge).
11) Maximum pump elevation (connected directly to branch).
12) Maximum elevation difference.
13) Maximum total dynamic head (for pump connected directly to branch).

510.03 Maximum Daily Design

The force main design maximum daily velocity (i.e. minimum velocity anticipated to occur at least once each day) shall not be less than 1.90 feet per second (fps) and not greater than 4.0 fps. This requirement shall apply to each force main branch or zone. Zones shall be divided based on the number of grinder pumps connected as shown in the following table. A new zone shall also be defined on each side of any common force main junction. The following table shall be used to determine the maximum number of grinder pumps operating simultaneously daily in each zone.

Maximum Number of Grinder Pumps Operating Simultaneously Daily

Number of Grinder Pumps Connected (Each range represents a separate zone.)	Maximum Number of Grinder Pumps Operating Simultaneously Daily
1	**1**
2-3	**2**
4-9	**3**
10-18	**4**
19-30	**5**
31-50	**6**
51-80	**7**

510.04 Basic Design and Construction Requirements for Low-Pressure Systems

All grinder pump systems shall be designed and constructed in accordance, but limited to, the following:

Attachment: 2020 Design, Construction, and Materials Specification Handbook (1575 : Design, Construction, and Materials Specification

a) The maximum number of contiguous (or nearly contiguous) homes allowed with private grinder pumps shall be 80 homes. Public wastewater lift stations may be considered for larger developments.

b) All properties to be served by a particular common force main shall be included in the same section of the development and developed at the same time. Any future section requiring a common force main shall have a separate force main independent of any other common force main. Each individual grinder pump installation connected to a common force main shall be consistent with the overall system design approved by the manufacturer and Public Utilities Director.

c) No public force main branches shorter than 300' will be permitted. Homes or other buildings on short cul-de-sac streets or panhandle/ flag lots shall be served via parallel individual service laterals.

d) Where grinder pumps are required, each building or property that is (or could potentially be) owned by a different owner shall have a separate wet well tank, grinder pump, and force main/service lateral.

e) No individual/private force main discharging directly to a gravity sewer will be permitted longer than will allow for a complete turnover of the sewage in the force main at least four times per day at 150 gallons/day per residential home.

f) Single-family pipe requirements: All individual force mains and service laterals shall be 1-1/4" or 1-1/2" nominal diameter SDR 21 PVC, Schedule 40 PVC (200 psi) or HDPE pipe with a SDR rating of 11 or heavier and conform to iron pipe sizing (IPS) or copper tube sizing (CTS) Diameter (1-1/4" or 1-1/2") shall be determined during the design of each project/installation and shall be approved by the Public Utilities Director. Joints shall be rated for at least 200 psi. HDPE piping with a standard inside dimension ratio (SiDR) will not be approved.

g) Commercial and Multi-family Residential pipe requirements**:** All individual force mains and service laterals shall be sized according to the estimated average flows anticipated from each building or parcel, with a minimum size of 1-1/4" nominal diameter. Pipe diameter shall be approved by the Public Utilities Director. Piping smaller than 3" nominal shall be SDR 21 PVC, Schedule 40 PVC (200) psi or HDPE pipe with a

SDR rating of 11 or heavier and conform to iron pipe sizing (IPS) or copper tube sizing (CTS). Piping 3” nominal diameter and larger shall be Ductile Iron Class 53 with ceramic epoxy Protecto 401 lining or approved equal. Joints shall be rated for at least 200 psi. HDPE piping with a standard inside dimension ratio (SiDR) will not be approved.

h) Detectable magnetic marking tape shall be installed in the ditch line one-foot (1’) below the final surface grade for non-metallic pipe installed within the public right-of-way and easements. If horizontal direction drilling is the installation method for the force main piping, the contractor shall affix minimum 12 ga. tracer wire to the product pipe prior to the pipe being pulled in to the drilling path.

i) Private force mains that connect to a public gravity sewer shall connect via a wye fitting. Private force main connections to public manholes must be approved by the Public Utilities Director or his/her designee.

j) Private service laterals that connect to a common/public force main shall connect at a manufactured fitting. No direct taps or tapping saddles will be permitted on public force mains. No new service connections to existing force mains will be permitted-only those connections included in the original design. A stainless-steel curb stop and cast-iron stop box shall be installed inside the public right-of-way or easement on each service lateral and shall be located approximately 5 feet from the public force main. Curb stops shall be least 2 inches lower than the connection of the service lateral to the public force main. All curb stops shall be made of stainless steel, and all curb-stop-boxes shall be made of cast iron or ABS with a cast iron lid. The top of each curb stop box shall be set in a concrete slab 18”x18”x6” thick (or 18” circular x 6” thick) with the top of the slab and box flush with the top of the ground.

k) Each individual/private force main or service lateral shall have at least one check valve located at the pump, and an additional redundant check valve located at the curb-stop. Check valves and all other portions of the private force main or service lateral shall meet the pump manufacturers requirements and recommendations.

l) All public force mains shall be at least 2” nominal diameter.

Attachment: 2020 Design, Construction, and Materials Specification Handbook (1575 : Design, Construction, and Materials Specification

m) Private force mains shall be installed with a minimum of 4 feet ground cover. Common/public force mains shall be installed with a minimum of 4 feet and a maximum of 12 feet ground cover. A minimum of 10 feet horizontal clearance (for parallel installations) and 18 inches vertical clearance (at crossings) shall be maintained between all force mains/services laterals and water mains/services.

n) Whenever possible, common/public force mains should be installed with a continuous positive grade to the discharge into the gravity sewer. Approved air/vacuum release valves shall be installed anywhere where this is not possible and where localized high points exist or on long runs (greater than 2500 feet) with no clearly defined high point occur. Air/vacuum release valves shall be installed on upward-turned tees. Taps or tapping saddles are not allowed. The Engineer and contractor should also evaluate the need for air release valve(s) at high points on private force mains and service laterals.

o) Flushing connections shall be installed at the end of each common force main (farthest from the discharge point), at each junction of two common force main branches, and at intermediate points such that the maximum distance between flushing installations (or discharge point) is 1000 feet. The Engineer and contractor should also evaluate the need for flushing attachments on private force mains and laterals.

p) Public force mains shall discharge into a gravity sewer through a separate manhole with no up-stream gravity sewer connections. The force main shall be extended along the bottom of the manhole and approximately 10 feet into the gravity sewer at the sewer's invert. A flow channel and bench shall be formed in the manhole to allow any water or sewage to drain into the gravity sewer, but still allow access into the sewer for maintenance. No laterals may be connected into the gravity sewer within 12 feet of this manhole.

q) A hydrostatic pressure test at 150 psi for at least 2 hours shall be performed in accordance with the hydrostatic testing requirements of AWWA C600 on all force mains and service laterals. If the pressure drops more than 5 psi in 2 hours, or the leakage is greater than allowable as determined by the formula in AWWA C600, the test shall be considered failed. Common force mains shall be tested after all air release valves, flushing installations, and other appurtenances have been installed,

including all service laterals installed to the curb stop. Private force mains and service laterals (on the pump side of the curb stop) shall be tested after the entire system is completely installed (except for the connection to the gravity sewer, when applicable).

r) The following requirements apply to installations connected to common force mains: All pumps shall be progressive cavity non-clogging, non-jamming grinder pumps capable of pumping 15 g.p.m. at 0 feet TDH, 9 g.p.m. at 138 feet TDH, and capable of operating at negative TDH without overloading the motor. The maximum design total dynamic head (TDH) for any pump shall be 138 feet (60 psi) with the maximum number of grinder pumps operating simultaneously daily (see article five). Grinder pump motors shall have built-in automatic reset overload protection. Grinder pumps shall be designed for the specific purpose of grinding and pumping domestic wastewater. Grinder pumps shall be suitable for operation under varying conditions in a system with multiple other grinder pumps. An anti-siphon valve and check valve shall be integral with the grinder pump. Level sensing control for grinder systems shall be non-fouling type with no moving parts in contact with the sewage. Each grinder pump system shall have a high-level audible and visual warning alarm to warn the building's occupants of a high wet well level. A battery backup system is recommended. Future replacement pumps must be the same type and meet the same operating conditions as the original pump.

s) Detectable marking tape shall meet the following requirements:

1) Minimum thickness of 5 mil, with a solid aluminum foil core. Construction is 2 mil clear film, reverse print laminated to aluminum foil to 2 mil clear film, making the film permanently printed.
2) Minimum width of 3 inches
3) Color coded green to signify Sewer or associated line.
4) Tensile strength of 35 lbs./in. (15,000 psi).
5) Elongation of 80 percent.
6) Adhesives with value of Morton 548 or higher.
7) Bottom layer with the value of virgin PE.
8) Top layer with the value of virgin PET.
9) Printability value of 45 dynes.

Attachment: 2020 Design, Construction, and Materials Specification Handbook (1575 : Design, Construction, and Materials Specification

t) Where future gravity service is reasonably possible (as determined by the Director of Public Utilities, or his/her designee) and there is unsewered up-stream property, a dry gravity sewer shall be installed from the most reasonable point at the downstream property line of the proposed development (for connection to the future trunk sewer) to the upstream boundary/boundaries of the development. This dry sewer shall be installed prior to acceptance of the grinder pump system by the City of Fairfield.

u) Whenever there is potential for installation of a future gravity sewer to serve the involved properties, each building utilizing a grinder pump system shall have a gravity sewer drain through the building's foundation to facilitate connection to the future sewer, whether the grinder pump is located inside or outside the foundation.

v) Where future gravity sewer service is reasonably possible, adequate platted right-of-way and/or easements shall be provided for future local gravity sewers. Each building's gravity sewer drain shall leave the foundation at a location that will facilitate connection to the future gravity sewer.

510.05 Operation and Maintenance

All individual grinder pump facilities and force mains serving only one home or property shall be privately owned and maintained by the property owner. All common force mains serving multiple properties will be publicly owned and maintained by the City of Fairfield.

The City of Fairfield will maintain the service lateral from the public force main to (and including) the curb-stop. The property owner will be responsible for the private service lateral or force main from the curb-stop the pump. The property owner shall maintain all check valves on the private service lateral and/or force main.

The property owner shall be responsible for operation, maintenance, and future replacement of the private grinder pump system. Maintenance of each grinder pump system shall be performed by a licensed contractor, which is certified and approved by the equipment manufacturer. Documentation of all maintenance shall be provided to the City of Fairfield's Public Utility Department upon request. Failure to adequately maintain the private pump system or provide the required documentation will cause for disconnection of sewer service by the City of Fairfield.

510.06 Construction Plan Requirements

The following language shall be included on all construction drawings for developments that include any lots to be served by private grinder pump systems. Such plats shall clearly indicate which lots require grinder pumps, and appropriate utility easements.

a) Where grinder pumps are required, each building or property that is (or could potentially be) owned by a different owner shall have a separate wet well tank, grinder pump, and force main/service lateral.

b) Each individual grinder pump installation connected to a common force main shall be consistent with the overall system design approved by the pump manufacturer and the City of Fairfield's Director of Public Utilities Department, or his/her designee.

c) Each building utilizing a grinder pump system shall have a gravity sewer drain through the building's foundation at a location that will facilitate connection to a future gravity sewer, unless future gravity sewer service is not possible.

d) All individual grinder pumps facilities and force mains serving only one home or building shall be privately owned and maintained by the property owner. All common force mains serving multiple properties will be publicly owned and maintained by the City of Fairfield.

e) All individual force mains and service laterals shall be 1-1/4" or 1-1/2" nominal diameter SDR 21 PVC, Schedule 40 PVC (200 psi) or other approved material.

f) Detectable magnetic marking tape shall be installed in the ditch line one foot (1') below the final surface grade for non-magnetic pipe installed the public right-of-way and easements.

g) Private force mains that connect to a public gravity sewer shall connect via a "Wye" fitting. No private force main connections to public manholes will be allowed.

h) Private Service laterals that connect to a common/public force main shall connect at the original laterals installed with the public force mains. No new

service connections to existing force mains will be permitted-only those connections included in the original system design. All curb-stops shall be made of brass, and all curb-stop-boxes shall be made of cast iron. The curb-stop and curb-stop-box shall remain when the connection is made, and the elevation of the curb-stop shall not be changed. The top of each curb-stop-box shall be set in a concrete slab 18” x 18” x 6” thick (or circular x 6” thick) with the top of the slab and box flush with the top of the ground. The City of Fairfield will maintain the service lateral from the common force main to (and including) the curb-stop. The property will be responsible for the private service lateral from the curb-stop to the pump.

i) Each individual/private force main or service lateral shall have one check valve located at the pump, and an additional redundant check valve located at the curb-stop. The property owner shall maintain all check valves. Check valves and all other portions of the private force main or service lateral shall meet the pump manufacturer’s requirements and recommendations.

j) No individual/private force main discharging directly to a gravity sewer will be permitted longer than will allow for the complete turnover of the sewage in the force main at least four times per day per day at 150 gallons/day per residential home.

k) The property owner shall be responsible for operation, maintenance, and future replacement of the private grinder pump system.

l) The annual maintenance of each grinder pump system shall be performed by a licensed and bonded plumber/contractor, which is certified and approved by the equipment manufacturer. Documentation of all maintenance of all pumping shall be provided by request to the City of Fairfield Director of Public Utilities, or his/her designee. Failure to adequately maintain the on-site pump system, or provide the required documentation will cause for disconnection of sewer by the Public Utilities Department.

m) The Engineer and plumber should evaluate the need for air release valve(s) and/or flushing attachments on private force mains and service laterals.

n) A hydrostatic pressure test of each private force main/service lateral shall be performed in accordance with the City of Fairfield requirements.

o) The following requirements apply to installations connected to a common force main:

1) All pumps shall be progressive cavity non-clogging, non-jamming grinder pumps capable of pumping 15 g.p.m. at 0 feet TDH, 9 g.p.m. at 138 feet TDH, and capable of operating at negative TDH without overloading the motor.
2) The grinder pump motor shall be designated for the specific purpose of grinding and pumping domestic wastewater. Grinder pumps shall be suitable for operation under varying conditions in a system with multiple other grinder pumps.
3) An anti-siphon valve and check valve shall be integral with the grinder pump.
4) Level sensing control for the grinder pump systems shall be of a non-fouling type with no moving parts in contact with sewage.
5) Each grinder pump system shall have a high-level audible and visual warning alarm to warn the building's occupants of a high wet well level. A battery back-up system(s) is strongly recommended.
6) Grinder pump systems shall be an *Extreme Series* grinder pump system as manufactured by Environment One Corporation, or approved equal. Future replacement pumps must be the same type, and meet the same operating conditions as the original pump. **See the Force Main Grinder Pump Station Installation drawings on Page 37 of the Standard Construction Drawings.**

510.07 Deed Restrictions

The following language shall appear on the recorded deed and record plat for each property to be served by a private grinder pump system. The language shall be included on any subsequent deeds, certificates of transfer etc. until such time as the grinder pump system is eliminated and replaced by a different means of providing sanitary sewer to the property.

a) The individual force main(s) serving the building(s) on this property, both check valves and all other appurtenances that are a part of the force main, or are connected to it, are private and shall be owned and maintained by the property owner. The curb-stop, curb-stop-box, and force main between the curb-stop and public force main shall be owned and maintained by the City of Fairfield.

Attachment: 2020 Design, Construction, and Materials Specification Handbook (1575 : Design, Construction, and Materials Specification

b) The property owner shall be responsible for operation, maintenance, and future replacement of the grinder pump system. Maintenance of each grinder pump system shall be performed by a licensed and bonded plumber/contractor, which is certified and approved by the equipment manufacturer. Documentation of all maintenance shall be provided to the City of Fairfield's Public Utilities Department, 5350 Pleasant Avenue, Fairfield, Ohio 45014. Failure to adequately maintain the on-site pump system, or provide the required documentation will cause for disconnection of sewer service by the Public Utilities Department.

c) For installations connected to a common force main:

1) All pumps shall be progressive cavity non-clogging, non-jamming grinder pumps capable of pumping 15 g.p.m. at 0 feet Total Dynamic Head (TDH), 9 g.p.m. at 138 TDH and capable of operating at negative TDH without overloading the motor. Grinder pump motor shall have built-in, automatic reset overload protection. Grinder pumps shall be designated for the specific purpose of grinding and pumping domestic wastewater. Grinder pumps shall be suitable for operation under varying conditions in a system with multiple other grinder pumps. An anti-siphon valve and check valve shall be integral with the grinder pumps. Level sensing control for grinder pump systems shall be non-fouling type with no moving parts in contact with sewage. Each grinder pump system shall have a high-level audible and visual warning alarm to warn the building's occupants of a high wet well level. A battery back-up system is recommended. Future replacement pumps must be the same type and meet the same operating conditions as the original pump.

2) These conditions are to run with the land, and shall be binding upon the Owner(s) as well as the heirs, successors, administrators, and assigns of the Owner(s), until such time as the grinder pump system is eliminated and replaced by a different approved means of providing sanitary service to the property.

3) Invalidation of any condition herein by a judgment or court order shall in no way affect any of the other provisions, which shall remain in full force and effect.

511.00 BUILDING PERMITS AND OCCUPANCY

Building permits in a new development (both major and minor Subdivisions) shall not be issued until the sewers serving the structure have been tested and approved. This prevents the unauthorized connection of a structure to a sewer thus preventing a test. A model home for sales display only, and not for immediate occupancy, may be built prior to construction of the sanitary sewers. The house shall not receive an occupancy permit issued until the sanitary sewers are tested and accepted by the City of Fairfield.

512.00 AS-BUILTS

Within thirty days after completion of construction work on any part of the wastewater system, the contractor shall provide a complete set of certified, reproducible as-built drawings to the Public Utilities Director or his/her designee, for all sewers constructed, including those constructed in subdivisions. These plans must be clearly marked “As-built” on every sheet with all sewer service lateral locations, manholes, inverts, and the distances verified by a post-construction survey made at the developer’s expense.

As-built plans shall be provided on reproducible sheets measuring 24 inches by 36 inches and sealed and signed by the engineer to certify that the “As-builts are per field conditions. Additionally, an AutoCAD (.dwg or .dxf) shall be submitted electronically.

Attachment: 2020 Design, Construction, and Materials Specification Handbook (1575 : Design, Construction, and Materials Specification

FIRE SERVICES – SECTION 600

Attachment: 2020 Design, Construction, and Materials Specification Handbook (1575 : Design, Construction, and Materials Specification

SECTION 600

FIRE SERVICES

601.00 FIRE HYDRANTS

601.01 Fire Hydrants

Fire hydrants shall conform to the "AWWA Standard for Dry-Barrel Fire Hydrants" AWWA C502 and subsequent revisions. Fire hydrants shall be connected only to water mains adequately sized to carry fire flows. The minimum size for a public fire main shall not be less than 8 inches. All fire hydrants and auxiliary valves shall be positively locked to the water main by restrained mechanical joints. The thread sizing on the 2 ½ inch hydrant nozzles shall be 3.187 x 7. All hydrants shall be provided with an integral 5" Storz fitting and cap with connecting cable. Hydrants shall have a dual rating of AWWA and FM-1510 approval. No chains connecting the 2 ½ inch caps to the hydrant or each other will be allowed.

Hydrants shall be permanently marked with the following information, which should be cast into the barrel.

a) Manufacturer's name or trademark.
b) Model or type designation.
c) Maximum rated working pressure.
d) Size of main valve opening.
e) Year of manufacture.
f) FM Approval mark.
g) The hydrant top shall the word "OPEN" and an arrow, showing the counterclockwise direction for opening.
h) The hydrant shall be a minimum rated working pressure of 250 psi.

All hydrants shall stand plumb and shall have their nozzles parallel with, or at right angles to the curb, with the pumper nozzle facing the curb. The horizontal centerline of the large outlet port shall be a minimum of 18 inches and a maximum of 30 inches above the final grade. In all cases the manufacturers recommended relative elevation of the break flange to the final grade shall be maintained. The barrel shall have a breakable safety section and/or bolts just above the ground line. Hydrants shall have a main valve opening of 5 ¼ inches; a 6 inch mechanical joint inlet to be suitable for setting in a trench 4 feet deep. Each hydrant must be equipped with an auxiliary valve with valve box. The valve shall be a compression type, opening against the pressure so the main valve remains closed if the barrel is broken off. The hydrant shall provide automatic drainage when the valve is closed. Hydrants shall be effectively blocked by the

Attachment: 2020 Design, Construction, and Materials Specification Handbook (1575 : Design, Construction, and Materials Specification

placement of concrete thrust-blocking, or approved mechanical anchor. **See the Fire Hydrant Installation drawings on Pages 17 and 18 of the Standard Construction Drawings.** All underground water service pipe systems shall be thoroughly flushed before connection to any fire suppression system. **Refer to the "Disinfection of Water Mains" section 411.01.**

601.02 Color of Hydrants

Fire hydrants shall be coated by the manufacturer as per the City of Fairfield requirements with industrial epoxy exterior grade paint. Public fire hydrants shall be painted OSHA safety yellow. Private fire hydrants shall be painted OSHA safety red.

601.03 Spacing

a) Travel distance is defined as the route taken by fire apparatus on any surface to which it can support the weight of a fire apparatus not to be less than 75,000 lbs.
b) Spacing of fire hydrants shall be 400' in public rights-of-way.
c) In residential zoned areas, hydrants must be within 800 feet travel distance to a building with a flow rate of at least 1000 gpm.
d) In commercial and industrial zoned areas, hydrants must be within 400 feet of travel distance to all areas of the building with a flow rate of at least 1000 gpm. If the building is equipped throughout with an approved sprinkler system, the distance may be increased to 600 feet.
e) The number of hydrants to be provided shall be based on the required fire flow which also will be based on building construction and occupancy use.
f) All dead-end water mains shall have a hydrant. If the potential exists for an extension of the dead-end water main, a main line tee, valve and auxiliary valve shall be installed.
g) All the above-mentioned requirements under hydrant spacing are subject to change by the authority having jurisdiction.

601.04 Location

Fire hydrants shall be located to provide complete accessibility, and minimize the possibility of damage from vehicles or injury to pedestrians. When placed behind a curb, the hydrant barrel shall be set so that the pumper, or hose nozzle cap will be a maximum of 5 feet from the curb area. No fire hydrants shall be installed closer than 2 feet from the curb, street, driveway, or other traffic edge or 5 feet from any driveway apron or cross street. No portion of the hydrant or nozzle cap shall cause an obstruction to a sidewalk, or pedestrian traffic. Fire hydrants that are connected in close proximity to the public main and within the public right of way or public easement shall be considered a public fire hydrant. Fire hydrants that are connected to a private main, or

Attachment: 2020 Design, Construction, and Materials Specification Handbook (1575 : Design, Construction, and Materials Specification

that are installed for the sole purpose of fire protection on private property shall be considered privately owned fire hydrants and labeled as such on any plans.

601.05 Fire Protection

The standard grading schedule of the American Insurance Association, the National Fire Protection Association Standards, and the ISO "*Guide for Determination of Needed Fire Flow*" should be followed in all cases for purposes of fire protection. Water mains that are not intended to carry fire flows, shall not be connected to fire hydrants.

Hydrants shall be provided in sufficient number and be located in a manner that will enable the needed fire flow to be delivered through hose lines to all exterior sides of any important structure. Hydrants shall conform to NFPA 24, or as directed by the City of Fairfield Fire Department.

601.06 Fire Line Vault

In all cases a fire line vault is preferred. However, when a structure is more than 200 feet from the public water main, a fire line vault is required. The vault shall be constructed of ODOT QC2 concrete for the accommodation of a DCDA, and shall conform to AWWA C510-92. All pipe and fittings for fire protection purposes shall comply with all applicable NFPA requirements. The pipe supplied from the public main to a point 10 feet beyond the vault shall be Ductile Iron class 53 and comply with Section 402.01 of this specification. Privately owned pipe materials supplied starting 10 feet beyond the vault must comply with all AWWA standards. If a non-metallic fire line is installed after the City's metering device, the fire line shall be buried with a continuous 12 ga tracer wire attached to the crown of the pipe. The tracer wire should be brought to grade in a valve box, meter pit or vault to allow for locating equipment connections. The vault shall have a sump pump or floor drain which must discharge at a point that provides positive drainage away from the vault. The access door to vault shall be an aluminum double hatch door Bilco JD-AL Series or Halliday H-W model. The size of the vault doors shall be determined by the vault proportions and approved by the Public Utilities Director. **See the Fire Line Meter Vault With Double Check Detector Assembly drawing on Page 23 of the Standard Construction Drawings.**

601.07 Double Check Detector Assembly (DCDA)

When it is necessary for any customer to have full line flow for fire protection purposes, there shall be installed in the line a device known as a "Double Check Detector Assembly". A metered by-pass shall be provided of sufficient size to carry normal usage without activating the assembly. The detector check valve shall be as manufactured by

Attachment: 2020 Design, Construction, and Materials Specification Handbook (1575 : Design, Construction, and Materials Specification

Ames, Watts or an approved equal. A full flow meter may be used as approved by the Director of Public Utilities or his/her designee. **See the Double Check Detector Assembly drawings on Pages 22 and 23 of the Standard Construction Drawings.**

601.08 Post Indicator Valve (PIV)

Connections to public water systems shall be controlled by post indicator valves of an approved type, and located not less than 40 feet from the protected building. The post indicator valves shall be placed where they will be readily accessible in case of fire. Post indicator valves shall be set so that the top of the post will be 36 inches above the final grade. Included with each PIV shall be a wrench and break away lock. Post indicator valve shall be properly protected against mechanical damage. Post indicator valves shall conform to NFPA 24.

601.09 Operating Test

Each hydrant and watch valve shall be fully opened and closed under system water pressure, and dry barrel hydrants checked for proper drainage. Where fire pumps are available, this shall be done with the pumps running. All testing shall comply with the most current version of NFPA requirements.

601.10 Fire Department Connections (FDC)

All required fire department connections or hose couplings shall be 5-inch Storz fittings and shall be placed within 100 feet of an accessible fire hydrant. All FDC's shall be red in color and 36 inches to their top elevation. Each FDC shall be clearly labeled with a 12" x 12" reflective sign, which is red in color with 2-inch white lettering. FDC's mounted to a building are not approved. The FDC and PIV shall be located in close proximity to each other as approved by the Fire Chief or his/her designee. **See the Double Check Detector Assembly drawings on Pages 22 and 23 of the Standard Construction Drawings.**

602.00 KNOX BOX DEVICE

All commercial buildings shall have a Knox Box device for providing Fire Department access. The placement of the Knox Box device shall be approved by the Fire Chief or his/her designee.

603.00 EXTERIOR DOOR IDENTIFICATION

To aid first responders during emergency situations, educational facilities and other large residential, commercial, or industrial facilities may be required to supply 6-inch

Attachment: 2020 Design, Construction, and Materials Specification Handbook (1575 : Design, Construction, and Materials Specification

letter/number identification on all exterior doors upon the request of the Fire Chief or his/her designee. Lettering will begin with the letter A on the street side of the building, then proceed to additional letters (B, C, D, etc.) on other sides of the building moving in a clockwise manner. Numbering will begin with the number 1 on the far-right side of any wall, then proceed to additional numbers (2, 3, 4, etc.) moving to the left. For example, the first door located on the far right of the street side of a building will be A1, then moving to the left will be A2, A3, etc. moving clockwise around the corner, the first door on the side of the building will be B1, then B2, B3, etc. **See the Exterior Door Identification Drawing on Page 41 of the Standard Construction Drawings.**

Attachment: 2020 Design, Construction, and Materials Specification Handbook (1575 : Design, Construction, and Materials Specification

APPENDIX

APPENDIX A -WORK WITHIN THE PUBLIC RIGHT-OF-WAY

Attachment: 2020 Design, Construction, and Materials Specification Handbook (1575 : Design, Construction, and Materials Specification

Appendix A -Work Within the Public Right-of-Way

a) All work within the public right-of-way requires a permit to be approved by the Public Works Director or his/her designee.

b) A preconstruction meeting may be required prior to the commencement of construction activities. Any approval is contingent on conditions set forth by the City of Fairfield to the contractor during said preconstruction meeting.

c) The applicant of a right of way permit from the City of Fairfield expressly agrees to do all work subject to approval of the City Engineer/Public Works Department, in accordance with City Standards and in accordance with conditions and regulations herein. Applicant is required to comply with all maintenance of traffic requirements outlined in the Ohio Manual of Uniform Traffic Control Devices as well as any applicable Ohio Department of Transportation standards.

d) Plans must be filed with the City Engineer showing existing and proposed locations (dimensions) and elevations of ALL drainage structures, pipes, and ditches; utility mains, lines, structures, valves, and appurtenances; pavement and curb and gutter in the vicinity of and affecting issuance of this permit. Applicant shall strictly adhere to plans as submitted; any unapproved deviation from the approved drawings or standards will be sufficient cause to have work stopped or reconstructed at the expense of the permit applicant.

e) An inspection of any water, sewer, roadway pavement, driveway apron, or sidewalk work is required. The applicant is to call the Public Works Department at (513) 867-4200, 24 hours (not including weekends or holidays) in advance to schedule required inspection(s).

f) A copy of the permit is required on the job site at all times.

g) All excavations remaining open after sundown must be plated and/or appropriately barricaded for the safety of the public. All extra or surplus material and earth must be removed from the right of way within 24 hours after completion of work.

h) Traffic must be maintained at all times and under all conditions set forth by the Public Works Department unless otherwise approved by the City Engineer. Any pavement removed will be temporarily restored immediately, in accordance with City standards for paving repair, and permanently repaved within 10 days by the person, or persons making the opening. All repairs are subject to approval of the City Engineer.

i) In case of emergency where a previously unapproved road opening must be made, due discretion must be exercised. Application for an open road cut permit must be obtained at the earliest possible time after such opening is made.

j) Upon completion of work, As-built drawings must be filed with the City Engineer showing whatever changes were made from original plan.

Attachment: 2020 Design, Construction, and Materials Specification Handbook (1575 : Design, Construction, and Materials Specification

k) The applicant shall be responsible for any failure(s) of workmanship and/or materials for a period of 1 year from the date of completion of all work performed under this permit. Any violation of any of these prescribed conditions will be deemed sufficient cause to refuse further permits to the applicant, and all necessary repairs resulting from said violation(s) will be made by the City. The costs of the repairs will be charged to the permit applicant, and all further applications for permits will be refused until payment of these charges is received.

Horizontal Directional Drilling (HDD) Information:

The following regulations were designed to provide safeguards and standard practices to be utilized when performing horizontal directional drilling work within the City of Fairfield. These regulations are minimum requirements and are intended to supplement other local, state, or federal laws. These regulations shall also be applied to other methods of underground construction including boring, jacking, pushing, and tunneling.

1. PREPLANNING

a) Development of Drill Plan

The applicant/contractor shall develop a drill plan in sufficient detail (50 scale minimum) to identify the limits of work, roadways, topography, all existing underground utilities, and entry and exit points in plan and profile. Field investigation, including survey work and records research shall be performed, by the plan preparer, during plan preparation.

b) Investigation of Existing Utilities

As-built plans of existing utilities shall be reviewed for potential conflict. All underground utilities within the limits of the drill path shall be included on the drill plan and profile in sufficient detail to determine the drill depth and bend radii needed to avoid damage by the drilling operations. The applicant/contractor shall expose existing utilities, as necessary, to confirm conflict avoidance.

c) Permit Approval

1) The applicant/contractor shall not proceed with drilling operations in any portion of work until they have a City approved right-of-way permit (and, if applicable, an approved road cut permit). Where a combination of traditional trenching work and boring work is proposed, the applicant shall clearly delineate on the plans the construction method proposed for each portion of the work. The applicant/contractor shall submit drilling procedures to the City Engineer with each permit application, outlining the processes necessary to identify and mitigate potential problems. These problems include, but are not limited to:

Attachment: 2020 Design, Construction, and Materials Specification Handbook (1575 : Design, Construction, and Materials Specification

i. Directional boring into another utility

ii. Directional boring that strays off line or off grade

iii. Heaved pavement caused by the directional boring operation

2. PRECONSTRUCTION

a) Notification of Ohio Utilities Protection Service

The applicant/contractor shall contact the Ohio Utilities Protection Service in accordance with State Law for a location-marking request. Where extensive utility marking is requested, the applicant/contractor shall submit a copy of the proposed plans with the marking request. An on-site meeting with the applicant/contractor and the O.U.P.S. Utility Coordinator may be scheduled to expedite the process. The applicant/contractor shall not request locates for more of the project than can be constructed in a 48-hour period.

b) Marking of Proposed Drill Path

1) Regardless of the extent of the directional boring, the applicant/contractor shall mark with white paint, flags, stakes or a combination of these to indicate the intended drill path prior to the utility locator's arrival to the site.

2) After the intended drill path has been marked and prior to the arrival of the utility locator, the applicant/contractor shall confirm that the intended drill path is the same as that represented in the approved plan. Any changes to the proposed drill path from that shown on the approved plan will require an amended permit. Approval is required from the City prior to implementing any alignment or grade change.

c) Locate Verification

If there are known facilities in the proposed drill path, the applicant/contractor shall conduct a pre-construction meeting with the utility owner(s), at the site, prior to commencement of work. The applicant/contractor shall check for visible signs of utilities that may have been missed by the locators. If any obvious utilities are not located, or if there are problems with OUPS markings, the applicant/contractor shall contact the responsible agency prior to start of work.

3. DURING CONSTRUCTION

a) Site Walkover and Calibration of Equipment

1) Prior to construction, the applicant/contractor shall walk the limits of the proposed

Attachment: 2020 Design, Construction, and Materials Specification Handbook (1575 : Design, Construction, and Materials Specification

work with the City Engineer or designee – if required by the City – to evaluate potential construction conflicts. Conflicts identified during the walkover shall be resolved to the satisfaction of the City.

2) The applicant/contractor shall calibrate the transmitter and receiver of the bore head according to manufacturer's instructions prior to, and during, construction.

b) Expose Existing Utilities

1) Identify all utility lines in the area where the directional drilling will occur. When the drill path crosses an existing utility the applicant/contractor shall expose the utility by vacuum excavation or hand digging to verify the location and depth of the facility. Where applicable, the applicant/contractor shall leave open a window to the exposed facility so the bore head and back-reamer can be visually monitored.

i. Applicant/contractor is to be aware that the City **does not locate** any private water and sanitary sewer mains that are located on private property outside of the right of way.
ii. Applicant/contractor is to be aware that the City **does not locate** any sanitary sewer laterals in the right of way.
iii. Applicant/contractor is to be aware that the other jurisdictions besides Fairfield have buried public utilities within the City of Fairfield corporation limits, both within and outside of the right of way.

c) Minimum Clearances

1) When clearance from a utility is required to be maintained, the required clearance shall include both horizontal and vertical clearances from the nearest edge of the existing facility to the closest edge of the largest diameter back reamer to be used along the drill path.

i. Sewers, Waterlines, etc. – 5 feet Horizontally and 18 Inches Vertically

ii. Traffic Facilities and Electric/Gas Facilities, etc. – 5 Feet Horizontally and 18 Inches Vertically

iii. Additional Horizontal and Vertical clearances may be required for conduit sizes greater than 6 inches

2) When the drill path is parallel to and within 5 feet of an existing sewer, waterline, or electric duct bank, special approval from the City's Public Works Director or Public Utilities Director will be required. If this type of parallel installation is approved, the applicant/contractor shall expose by vacuum excavation or hand digging at reasonable intervals to confirm clearance to the adjacent utility, but not less than every 200 feet.

Attachment: 2020 Design, Construction, and Materials Specification Handbook (1575 : Design, Construction, and Materials Specification

d) Monitor Drilling Operations

The applicant/contractor shall monitor, at 10-foot intervals, the horizontal and vertical location of the drill head and back-reamer to confirm its conformance with the approved drill plan. The applicant/contractor shall not deviate from the approved drill plan. If the bore cannot be completed as per the approved drill plan the applicant/contractor shall stop operations until such time that the City can approve the new alignment.

e) Protection of Locate Markings

The applicant/contractor shall maintain, and protect the locate marks until they are no longer required for proper and safe execution of the drill plan.

f) Drilling Fluid Control

The applicant/contractor shall control the use of drilling fluids to prevent damage to adjacent utilities and pavement in accordance with the Horizontal Directional Drilling Good Practices Guidelines published by the HDD Consortium, current edition.

g) Emergency Contacts

The applicant/contractor shall provide an emergency contact list to the City prior to construction for all known utilities anticipated to be crossed during the drilling operations.

h) Damage to Underground Facilities

1) If an underground object is struck, the applicant/contractor shall stop the drilling process, pothole or otherwise expose to ascertain the situation before pulling back the bore head. In the event the drilling damages an existing facility the applicant/contractor shall immediately notify the City at (513) 867-4200. The applicant/contractor shall complete and submit to the City a written report explaining the events that led to the damaged facility within 24 hours of the damage. Repairs to the damaged City or other existing facility will be in accordance with Ohio Utilities Protection law and standard construction practices. Repair work shall be proposed to and approved by the City prior to performing repair work.

2) If the applicant/contractor is unable or unwilling to repair the damaged utility to the satisfaction of the owner, he/she shall be held liable for the damages caused to the City's infrastructure and the existing facilities of other utility companies.

4. POST-CONSTRUCTION

The applicant/contractor shall be responsible for televising sewer lines for a damage analysis if so requested by the City. This may include both public sewer main inspection and private sewer lateral inspections.

Attachment: 2020 Design, Construction, and Materials Specification Handbook (1575 : Design, Construction, and Materials Specification

Insurance Requirements for Work Within the Public Right-of-Way

Whenever work is performed in the right-of-way or on City-owned property, the contractor shall have insurance that conforms to the following:

a) *Insurance, Worker's Compensation* - The Contractor shall take out and maintain during the life of the contract, Worker's Compensation Insurance, as required by statute, for all of his employees employed at the site of the project, and in case any work is sublet, for all the subcontractor's employees not otherwise insured. In case any class of an employee, who is engaged in hazardous work at the site of the project, is not protected under the Worker's Compensation Statute, the Contractor shall provide adequate coverage for the protection of the employees not otherwise protected.

b) *Insurance, Public Liability* - The Contractor shall take out and maintain during the life of the contract, such Public Liability (Bodily Injury and Property Damage) Insurance as shall protect him and any subcontractor performing work at the site from claims for damages because of bodily injury, including accidental death and from claims for property damages which may arise from operations under the contract, whether such operations be by him or by any subcontractor, or by anyone directly or indirectly employed by either of them. Liability coverage is to be written on a comprehensive general liability policy and must include: premises-operations, manufacturers and contractors, owners, landlords and tenants; contractors protective; products-completed operations; contractual liability. General liability shall also include underground property damage by mechanical equipment. When blasting is done, coverage must be provided for the explosion hazard.

c) *Railroad Insurance* - Where work on railroad right-of way is involved, the Contractor shall also be covered by Railroad Property Liability Insurance with limits of liability as required by the railroad company on whose property the work is being performed. All comprehensive-automobile-general liability insurance policies shall include, as named insured, the Contractor, the Owner/Developer, and the City of Lebanon, Ohio.

d) *Minimum Insurance Limits* - The minimum amounts of insurance to be furnished by and for the general contractor and the subcontractors under this contract are:

   1) Worker's Compensation, OH Statutes Employers Liability: $100,000 limit of liability

   2) Comprehensive General Liability:

      i. Contracts less than $1,000,000.00: $2,000,000.00 minimum coverage

      ii. Contracts in excess of $1,000,000.00: $5,000,000.00 minimum coverage

   3) Comprehensive Automobile Liability: $1,000,000.00 combined single limit per occurrence

Attachment: 2020 Design, Construction, and Materials Specification Handbook (1575 : Design, Construction, and Materials Specification

e) *Railroad Protection Insurance* - (where work is to be executed within the railroad right-of-way) Loss of Life or Injury to Person - As required by Railroad Property Damage - As required by Railroad

Attachment: 2020 Design, Construction, and Materials Specification Handbook (1575 : Design, Construction, and Materials Specification

APPENDIX B - TRAFFIC IMPACT STUDIES

Attachment: 2020 Design, Construction, and Materials Specification Handbook (1575 : Design, Construction, and Materials Specification

Appendix B - Traffic Impact Studies

Traffic studies for new development and redevelopment within the City shall follow the procedures outlined by this document and must be approved by the City Engineer or his/her designee. Traffic access and impact studies are intended to determine the need for any improvements to the adjacent and nearby roadway system to maintain a satisfactory level of service and the appropriate access provisions for a proposed development.

The primary objectives of a traffic study are as follows:

- Provide a basis for assessing the transportation impacts of a new development or expansion of an existing development; identify the need for any improvements to the supporting roadway system to provide satisfactory levels of service; and, to address safety issues.
- Address relevant transportation issues associated with development proposals that may be of concern to neighboring residents, businesses, and property owners.
- Determine the appropriate location, spacing, and design of the access system for the proposed development in compliance with City standards.
- Evaluate the internal circulation and connectivity systems of the proposed development to provide safe and efficient internal traffic flow and access to/from the adjacent and nearby roadway system.
- Allow compliance with the most current edition of the City's Thoroughfare Plan (or other applicable thoroughfare plans).
- Provide a basis for improvement and funding discussions in conjunction with zoning, special permit, and subdivision plat approvals.

1. TRAFFIC STUDY GUIDELINES

The need for either a detailed traffic impact study or a limited traffic operations analysis will be identified when rezoning, variance, or plan approval petitions are filed (or discussed with public officials). The City Engineer may also identify the need for a traffic impact study or operations analysis in response to an access permit application.

a) Study Warrants for a Traffic Impact Study

A complete traffic impact study (TIS) will be required for any proposed development or redevelopment that meets one or more of the following criteria:

1) *Significantly-sized project*. A development meets this criterion if it generates more than 100 trip ends (i.e., two-way vehicle-trips) during any one hour of an average

Attachment: 2020 Design, Construction, and Materials Specification Handbook (1575 : Design, Construction, and Materials Specification

weekday. These trip ends shall be calculated using the latest edition of Trip Generation as published by the Institute of Transportation Engineers (or upon special studies of unique land-uses as approved by the reviewers).

2) *Modifications to roadways*. This criterion is met when the proposed development is expected by the reviewers to significantly impact a roadway segment, or roadway segments, identified in thoroughfare plans and/or improvement programs of the City, County, State, or other jurisdictions. This criterion is also met when access for the proposed development occurs on a public road that may be widened or improved in accordance with adopted thoroughfare plans.

3) *Nearby congestion*. A development meets this criterion if the proposed development is expected, in the opinion of City staff, to significantly impact surrounding roadways, intersections, or sets of intersections which are already operating at level of service "D" or worse during any hour (on a design day, or days, selected for analysis purposes). The level of service will be determined by an analysis prescribed in the current edition of the Highway Capacity Manual (Transportation Research Board) using data that reflects the current traffic conditions.

4) *High traffic impact area*. This criterion is met when, in the opinion of City staff, the proposed development is located in a high traffic impact area. Such reflects special sensitivity to traffic condition changes due to existing congestion, problematic circulation patterns, burgeoning traffic operations problems, or other traffic conditions of special concern. A traffic impact study will be requested for any proposed new development or modifications to existing development within a high traffic impact area.

b) <u>Study Warrants for a Traffic Operations Analysis</u>

A traffic operations analysis may be requested for petitions which do not meet the warrants for a detailed traffic impact study. A traffic operations analysis will be requested for any one of the following conditions:

1) Requests for a driveway (or driveway modification) on any public road.

2) Existing sight distance limitations or high accident experience adjacent to the subject site.

3) Modifications to a site plan for an existing development where the parking layout and/or internal circulation system could affect traffic operations on the external roadway system.

4) Requests or probable need for a new traffic signal to control driveways serving a proposed or existing development.

Examples of traffic operations analyses include studies of proposed driveway locations, resulting

Attachment: 2020 Design, Construction, and Materials Specification Handbook (1575 : Design, Construction, and Materials Specification

sight distances, driveway and intersection geometry and control, turn lane needs and design, accommodation of projected queuing conditions, accident experience and safety, and traffic signal warrant and progression analysis.

2. PRE-MEETING AND MEMORANDUM OF UNDERSTANDING

Prior to commencing the preparation of a traffic impact study, the preparer shall schedule a meeting with appropriate City staff. Other participants in this pre-meeting shall be representatives of other jurisdictions and agencies as deemed appropriate by City personnel. The participants at the meeting shall identify and agree upon the following issues and needs prior to the preparation of the TIS:

a) Study area
b) Study years
c) Development phasing, if applicable
d) Field data collection requirements
e) Acceptable data associated with traffic volumes, accident history, and signal operations
f) Peak traffic hours (analysis hours)
g) Trip generation, trip distribution, and assignment methods
h) Applicable planning documents (including the City's Thoroughfare Plan and Access Management Plan)
i) Other traffic impact studies prepared for developments in the study area
j) Utilization of travel demand models
k) Background traffic and growth factors
l) Acceptable levels of service (LOS)
m) Analyses methodology and software (capacity, signal warrants, etc.)
n) Cycle lengths at signalized intersections
o) Safety issues (sight distances, accident data, etc.)
p) Committed and planned roadway improvements and schedule
q) TIS submittal date

The preparer shall submit a Memorandum of Understanding (MOU) which details the assumptions and methodologies agreed upon regarding the items above – and the preparer shall request City staff concurrence with the contents of the MOU. The MOU shall be submitted to the City within one week subsequent to the pre-meeting. The MOU will be approved by City staff within one week of receipt – assuming that all items are properly addressed.

If not addressed in the MOU, the preparer shall make a separate submission regarding traffic growth rates, vehicle-trip generation rates, and directional distributions of site generated traffic to the City for concurrence and City staff will respond to the preparer on these items within one week of receipt.

Attachment: 2020 Design, Construction, and Materials Specification Handbook (1575 : Design, Construction, and Materials Specification

3. PREPARER QUALIFICATIONS

Traffic Impact Studies shall be prepared by professionals with training and experience in traffic engineering/transportation planning and under the supervision of a registered professional engineer in Ohio with training and experience in traffic engineering (operations and safety analysis experience). The preparer shall not be a member of the TIS review team; neither shall the preparer be related to a review team member nor hold a financial interest in the project under study. The final document shall be signed and stamped by a Professional Engineer registered in the State of Ohio.

4. STUDY GUIDELINES

a) Study Areas

Any complete transportation study analyzing off-site access needs and impacts will include at least all site access points and major intersections (signalized and unsignalized) adjacent to the site. Beyond this area, the review team will determine any additional area to be included based on local or site-specific deficiencies, development size, traffic conditions, or local policy potentially affected by the proposed development. The study area will also encompass vacant parcels of land believed to impact the intersections being analyzed so as to analyze the proposed project in the context of other previously approved or anticipated developments in the surrounding area. Generally, the study area must be large enough to encompass the critical intersections to be analyzed. In high traffic impact areas, the study area may include the entire zone in order to capture the cumulative impact of future development within the area.

The following shall be included in the study area conditions section of the report:

1) Study area boundaries

2) Study area land-uses (existing and anticipated future development)

3) Site accessibility (existing and future roadway system; document basic features to include jurisdiction, functional classification, pavement widths, lane usages, traffic control devices, speed limits, etc.)

4) TIS intersections (defined in the Memorandum of Understanding):
    i. Lane usages and traffic control devices
    ii. Sight distances (compare existing distances with established criteria)
    iii. Accident experience (if requested)

Attachment: 2020 Design, Construction, and Materials Specification Handbook (1575 : Design, Construction, and Materials Specification

b) Study Years

Beyond the assessment of current conditions, traffic impact studies are to address conditions in the anticipated build-out year of the proposed development and the design year – which is 20 years beyond the anticipated build-out year. Alternate time frames for smaller developments may be considered on a case by case basis. Some general guidelines are as follows:

1) All the study intersections shall be analyzed with respect to existing conditions.

2) For site access points (and immediately adjacent intersections as appropriate), analyses shall be performed for both build-out and design year conditions. Such driveways and intersections shall be configured to meet design year requirements. Analyses of build-out conditions shall define what elements of the long-term configuration need to be made to yield acceptable conditions in the build-out year.

3) For all other study intersections, analyses shall be performed (with and without the proposed development) for the build-out year. The impacts associated with site generated traffic must be appropriately mitigated at these intersections.

4) If the proposed development is to be implemented in phases, it may be appropriate to analyze each major phase (e.g., initial phase, an intermediate phase, and full project build-out) in order to define the potential for staging defined roadway improvements/modifications.

c) Study Days and Hours

1) For each defined horizon year, specific time periods are to be analyzed. In most cases, only analyses of weekday street peak hours will be required. However, land-use classifications which experience their highest trip generation levels during periods other than street peak hours may require analyses for such periods to determine proper site access and turn lane storage requirements. Examples of land-use classifications which typically have substantially higher site trip generation peaks at times other than weekday street peak hours are: shopping centers, discount stores, recreational uses (e.g., theaters, stadiums, and arenas), restaurants, schools, churches, and garden centers.

2) The analysis time period (and condition) shall be discussed and designated by the reviewers at the initial meeting. The objective is to designate the design day(s) and time period(s) so as to cause evaluation of conditions during the design hour or design hours. The selection of the proper design day and hour is particularly important for a development which exhibits significant seasonal variations in trip generation (such as shopping centers). Special consideration must also be given to a development located in a zone that experiences (or will experience) significant seasonal variations in traffic volumes due to unique land-uses.

3) The design hour(s) to be used in a TIS will be discussed and designated by the reviewers at the initial meeting. At a minimum, all studies must include assessments of conditions during both the AM and PM peak hours (unless otherwise directed by City staff).

d) <u>Traffic Counts</u>

1) In areas without current traffic counts, unless otherwise approved, traffic counts shall be conducted for a minimum of 3 days.

2) For areas with current traffic counts, counts may be taken for a minimum of 1 day. These counts will be compared with traffic counts on file. If the counts are comparable, the newly collected counts will be considered adequate for the study. If the counts are not comparable, the developer and the City shall hold discussions to determine the source of the difference and whether new counts should be considered, or what existing counts should be used for the study.

3) The City may require longer traffic count timeframes to account for unique circumstances. This will be determined on a case by case basis.

e) <u>Traffic Volume Projections</u>

The total anticipated transportation infrastructure requirements in the study horizon year(s) depend on traffic projections and are needed so that the City can accurately evaluate implications associated with the applicant's request for development approval. However, the impacts and infrastructure needs will be assessed separately for the baseline condition (horizon year development excluding site) and total development (horizon year development including site).

1) Non-Site Traffic

i. Non-Site (background) traffic volumes are composed of existing volumes, accepted general growth of traffic, and traffic generated by previously approved new developments in the study area.

ii. *Non-Site Development within Study Area*. The impacts of the anticipated non-site development shall be assessed to aid both the City and the applicant in the determination of sources of transportation infrastructure needs. All significant developments within the study area that have been approved or are likely to occur by the specific horizon years shall be identified and incorporated into the study. The land-use type and magnitude of the probable future developments in the horizon years shall be identified in conversations with staff of the City and other relevant public agencies.

iii. *Non-Site Development Outside Study Area*. In some cases, the City may request the applicant to specifically consider and include traffic generated by large developments located outside the defined study area. In such cases, a

Attachment: 2020 Design, Construction, and Materials Specification Handbook (1575 : Design, Construction, and Materials Specification

TIS prepared for the identified development will be provided to the applicant by the City to permit the inclusion of relevant traffic volumes within the subject TIS. The applicant will not be required to undertake vehicle-trip generation and trip distribution for developments outside the study area.

2) Site Traffic

i. *Site Development*. Development proposed to be located on the site under study shall be categorized by specific land-use type consistent with classifications contained in the latest edition of Trip Generation (Institute of Transportation Engineers). The proposed number of development (building) units (e.g., gross square feet of building area, dwelling units, hotel rooms, etc.) shall be provided. Land area is insufficient to provide a basis for analysis.

ii. If the proposed land-use or density is inconsistent with the current land-use plan, comparison of the proposed land-use and the land-use plan recommendation shall be made using classifications contained in the Trip Generation report.

iii. Trips generated by the proposed development shall be calculated using the most current edition of the Institute of Transportation Engineers (ITE) Trip Generation Manual. Methodologies contained in the ITE Trip Generation Handbook shall be used for internal trips and pass-by trips calculations.

iv. Distribution and assignment of site traffic shall be based on engineering judgment and the method shall be pre-approved by the City. The directions from which traffic will access the site will depend on various factors, including:
- Type of proposed development and the area from which it will attract traffic,
- Size of proposed development,
- Competing developments (if applicable),
- Surrounding land uses and population, and
- Conditions on surrounding roadway system.

3) Pass-By Trips

i. Pass-by trips will be permitted for retail/commercial developments.

ii. Pass-by trips shall be in accordance with ITE Trip Generation guidelines.

f) <u>Capacity Analysis</u>

The standard criterion used to define quality of traffic flow is "level of service" (LOS). This is a qualitative assessment of factors such as speed, volume, geometry, delays, and ease of

Attachment: 2020 Design, Construction, and Materials Specification Handbook (1575 : Design, Construction, and Materials Specification

maneuvering. All analysis techniques specify the quality of operations as a letter - with 'A' representing the best operating condition and 'F' representing the worst. Refer to the Highway Capacity Manual for LOS criteria.

The minimum acceptable design level of service (LOS) in the City is 'C'. At intersections, analyses should show an overall LOS of 'C' with no individual movement operating at less than 'D' to be acceptable. Where unacceptable levels of service are calculated for background or "no-build" conditions, the applicant is responsible for only maintaining the same level of service when site traffic is added to the roadway element.

1) Methodology

i. The use of HCS software is acceptable for capacity analyses.

ii. In general, a Peak Hour Factor (PHF) of 0.90 shall be used for horizon year analyses. (A different PHF may be more appropriate for certain land uses (e.g., a school); such conditions will be discussed at the initial meeting.)

iii. Capacity and level of service calculations shall be performed for each site drive intersection for build-out year and design year conditions. Site driveway intersections shall be configured for design year conditions.

iv. Capacity and level of service calculations shall be performed for all other study intersections for:

A. Existing conditions (i.e., current volumes on existing roadway system).

B. Build-out year 'No-build' (non-site) traffic volumes on existing (or planned and programmed) roadway system.

- If improvements/modifications to the existing roadway system are planned and programmed, City staff will provide this information to the applicant and the improved roadway system will be used as a base for testing horizon year traffic conditions – as appropriate.
- If roadway improvements or modifications beyond those formally planned or programmed are assumed in the 'no-build' analysis, then these improvements or modifications will be considered to be the responsibility of the applicant. If this is not the case, then the rationale for considering such improvements must be clearly described.

C. Build-out year 'Build' (i.e., non-site plus site) traffic volumes on existing (or planned and programmed) roadway system.

D. Build-out year 'Build' traffic volumes on improved/modified roadway

Attachment: 2020 Design, Construction, and Materials Specification Handbook (1575 : Design, Construction, and Materials Specification

system that mitigates the traffic impacts of the proposed development.

- Produce a table for each intersection, study period, and study horizon year listing the level of service and delay (or v/c ratio) by (1) individual movement, and (2) overall intersection for: Existing conditions, No-Build conditions, Build conditions on existing roadway system, and Build conditions on proposed roadway system.

2) Mitigation

Recommendations shall be made in the TIS for the site access points and external roadway improvements (such as additional through lanes, turn lanes, and traffic control devices) necessitated as a result of the proposed development. The traffic impacts of the proposed/planned development must be properly mitigated. Suggested improvements/modifications must be practical and acceptable to the appropriate agency/jurisdiction. A scaled concept sketch or (at least a schematic figure) shall be provided illustrating the improvements/modifications that properly mitigate the traffic impacts of the proposed development.

g) <u>Turn Lane Criteria</u>

1) Turn lanes at signalized intersections (existing or warranted upon on build-out day) and at off-site unsignalized intersections shall be provided based on capacity analyses (as part of mitigation).

2) Left turn lanes shall be provided at site access points under the following conditions:

   i. On major and minor arterial roadways with speed limits greater than 40 mph, or
   ii. On major and minor collector roadways with speed limits greater than 40 mph and more than 10 left turning vehicles during the peak hour of the development, or
   iii. Per graphs 401-5aE, 401-5bE and 401-5cE, which are the left turn lane warrants contained in the ODOT Location and Design Manual Volume I. (These are Graphs 1, 2, and 3 in the ODOT State Highway Access Management Manual.) Note that the warrants apply only to the free flow approach of the unsignalized intersection. Turn lanes on the minor approach (under stop-sign control) shall be provided based on capacity analyses.

3) Right turn lanes shall be provided at site access points per graphs 401-6aE, 401-6bE, 401-6cE and 401-6dE, which are the right turn lane warrants contained in ODOT Location and Design Manual Volume I. (These are Graphs 4, 5, 6 and 7 in the ODOT State Highway Access Management Manual.)

4) Left or right turn lanes may also be required when deemed necessary for safety

Attachment: 2020 Design, Construction, and Materials Specification Handbook (1575 : Design, Construction, and Materials Specification

purposes by the City Engineer. The length of left and right turn lanes shall be based on the criteria contained in the ODOT Location and Design Manual Volume I Section 401-9E and 401-10E or, where appropriate, on the results of queuing analyses associated with the capacity calculations. The length of turn lanes shall be based on a design speed five miles per hour above the posted speed limit. For roadways with an unposted speed limit, a design speed of 55 MPH shall be used.

h) Traffic Signal Warrant Criteria

Warrant analyses for the installation of a traffic signal shall be required if a signal is recommended as a mitigating measure. Signal warrants, as contained in the latest edition of the Ohio Manual of Uniform Traffic Control Devices (OMUTCD), shall be used for any formal request associated with the installation of a traffic signal. In general, if any one or more of the eight warrants as found in the OMUTCD is met, a traffic signal may be considered. Signal warrant analyses may be conducted using projected traffic volumes to identify the potential need for the installation of traffic signals. However, traffic signals will not be installed unless: (1) the subject intersection is unquestionably projected to meet warrants on build-out day of the development, or (2) actual counts at the intersection meet warrant thresholds

Any intersection that meets signal warrant thresholds must also be evaluated in terms of location and spacing based on the standards noted in the City's Access Management Regulations or in the ODOT State Access Management Manual (if applicable) for the access category assigned by the City's Thoroughfare Plan.

i) Site Access, Circulation, Parking and Roadway Plans

The following shall also be addressed in the TIS:

1) On-site parking needs.
2) Ease of internal circulation.
3) On-site queuing provisions.
4) On-site traffic operations and control (as they may affect traffic operations on the external roadway system).
5) Design of site driveways to include pavement widths, lane usages, proposed median widths, traffic control devices, etc.

Plans showing site access and any roadway improvements/modifications shall be submitted with all requested traffic impact studies and/or traffic operations analyses. These plans shall be to a practical scale.

The site access and roadway plan(s) shall be of sufficient detail to show:

Attachment: 2020 Design, Construction, and Materials Specification Handbook (1575 : Design, Construction, and Materials Specification

1) Location and spacing of all site access points and driveways (including relationships to other nearby roadways, intersections, and driveways),
2) External roadway improvements/modifications,
3) Lane configurations and control,
4) Queuing and vehicle storage distances,
5) Spacing of traffic signals to permit proper traffic progression on the adjacent roadway system,
6) Sight distances,
7) Adequate pedestrian, bicycle, and public transit provisions (if applicable),
8) Sufficient emergency and service/delivery access, and
9) Proper on-site circulation and parking layout so as not to affect traffic flow and operations on the external street system.

5. SUBMITTAL REQUIREMENTS

All traffic impact studies and traffic operations analyses must be documented in a report. The results of traffic operations analyses can be summarized in a memorandum type report – while the results of traffic impact studies must be submitted in standard report formats. Such traffic impact reports shall be complete and concise. Two copies of the report shall be submitted to the City for review.

6. PUBLIC RECORD

All submitted documents, including both reports and data, become public record upon submittal. Information contained in these submittals may be used by agency staff or other study preparers in subsequent studies. The original sources of data and information shall be cited when taken from prior submittals.

Attachment: 2020 Design, Construction, and Materials Specification Handbook (1575 : Design, Construction, and Materials Specification

APPENDIX C - SMALL CELL INFRASTRUCTURE WITHIN THE RIGHT-OF-WAY

Attachment: 2020 Design, Construction, and Materials Specification Handbook (1575 : Design, Construction, and Materials Specification

Appendix C - Small Cell Infrastructure within the Right-of-Way

Small cell infrastructure within the public right-of-way requires a permit to be approved by the Public Works Director or his/her designee.

1. PURPOSE

The purpose of these guidelines is to establish general procedures and standards, consistent with all applicable federal and state laws, for the siting, construction, installation, collocation, modification, relocation, operation, and removal of Small Cell Facilities and Wireless Support Structures within the City's right-of-way. The goals of these guidelines are to:

a) Provide standards, technical criteria, and details for Small Cell Facilities and Wireless Support Structures in the City's right-of-way to be uniformly applied to all applicants and owners of Small Cell Facilities or support structures for such facilities.

b) Enhance the ability of wireless communications carriers to deploy small cell wireless technology in the City quickly, effectively, and efficiently so that residents, businesses, and visitors benefit from ubiquitous and robust wireless service availability.

c) Preserve the character of the City's neighborhoods and corridors.

d) Ensure that Small Cell Facilities and Wireless Support Structures conform with all applicable health and safety regulations and will blend into their environment to the greatest extent possible.

e) Comply with, and not conflict with or preempt, all applicable state and federal laws.

2. DEFINITIONS

a) *Abandoned* means Small Cell Facilities or Wireless Support Structures that are unused for a period of three hundred sixty-five days without the Operator otherwise notifying the City and receiving the City's approval.

b) *Antenna* means communications equipment that transmits or receives radio frequency signals in the provision of wireless service.

c) *Collocation or Collocate* means to install, mount, maintain, modify, operate, or replace wireless facilities on a Wireless Support Structure.

Attachment: 2020 Design, Construction, and Materials Specification Handbook (1575 : Design, Construction, and Materials Specification

d) *Decorative Pole* means a pole, arch, or structure other than a street light pole placed in the right-of-way specifically designed and placed for aesthetic purposes and on which no appurtenances or attachments have been placed except for any of the following: (a) electric lighting; (b) specially designed informational or directional signage; (c) temporary holiday or special event attachments.

e) *Operator* means a wireless service provider, cable operator, or a video service provider that operates a Small Cell Facility and provides wireless service. *Operator* includes a wireless service provider, cable operator, or a video service provider that provides information services as defined in the "Telecommunications Act of 1996," 110 Stat. 59, 47 U.S.C. 153(2), and services that are fixed in nature or use unlicensed spectrum.

f) *Permittee* means the owner and/or operator issued a permit pursuant to these guidelines.

g) *Right-of-Way* means the surface of, and the space within, through, on, across, above, or below, any public street, public road, public highway, public lane, public path, public alley, public sidewalk, public drive, public easement, and any other land dedicated or otherwise designated for a compatible public use, which is owned or controlled by the City of Fairfield.

h) *Right of Way Permit ("Permit")* means the non-exclusive grant of authority issued by the City of Fairfield to install a Small Cell Facility and/or a Wireless Support Structure in a portion of the right-of-way in accordance with these guidelines.

i) *Small Cell Facility* means a wireless facility that meets both of the following requirements:

1) Each antenna is located inside an enclosure of not more than six cubic feet in volume or, in the case of an antenna that has exposed elements, the antenna and all of its exposed elements could fit within an enclosure of not more than six cubic feet in volume.

2) All other wireless equipment associated with the facility is cumulatively not more than 28 cubic feet in volume. The calculation of equipment volume shall not include electric meters, concealment elements, telecommunications demarcation boxes, grounding equipment, power transfer switches, cut-off switches, and vertical cable runs for the connection of power and other services.

j) *Utility Pole* means a structure that is designed for, or used for the purpose of, carrying lines, cables, or wires for electric or telecommunications service. "Utility Pole" excludes street signs and decorative poles.

k) *Wireless Support Structure* means a pole, such as a monopole, either guyed or self-

supporting, street light pole, traffic signal pole, a 15 foot or taller sign pole, or Utility Pole capable of supporting Small Cell Facilities. *Wireless Support Structure* excludes a utility pole or other facility owned or operated by an electric utility.

3. REQUIREMENT TO COMPLY

Placement, modification, operation, relocation, and removal of a Small Cell Facility and/or Wireless Support Structure shall comply with these design guidelines of the City of Fairfield's Codified Ordinances at the time the permit for installation, modification, relocation, or removal is approved and as amended from time to time.

4. APPLICATION

Materials

Prior to installation, modification, relocation, or removal of a Small Cell Facility, relocation or removal of an existing Wireless Support Structure, installation of a new Wireless Support Structure, or collocation on an existing Wireless Support Structure in the right-of-way, the operator shall apply to the City and receive a Right-of-Way Permit for Micro Wireless from the City.

The following items must be included in order for the application to be considered complete:

a) General Requirements for Right-of-Way Permit Applications for a Small Cell Facility and/or Wireless Support Structure in the Right-of-Way, excluding applications for removal:

Contact Information: Applicant must provide contact information, including the name of the company seeking the permit and the name of a designated point of contact along with his/her mailing address, email address and phone number. The operator is responsible for providing updated contact information to the City when the contact information changes from that which was included in the application. For the purposes of submitting an application under this section, "Operator" also includes any person that, at the time of filing the application, provides the City the person's written authorization to perform the specific work for which an application has been submitted on behalf of an operator.

Consolidated Applications: An applicant seeking to construct, modify, collocate or replace more than one small cell facility or more than one wireless support structure within the City may file a consolidated application for up to thirty (30) small cell facility requests or up to thirty (30) wireless support structure requests provided the requests grouped on a consolidated application only address substantially the same type of small cell facilities or substantially the same type of

Attachment: 2020 Design, Construction, and Materials Specification Handbook (1575 : Design, Construction, and Materials Specification

wireless support structures. (Note: The City may treat each request individually during application review and processing when issuing a determination.)

Aerial Map: Applicant must include an aerial map showing the location of the proposed or existing support structure to which the Small Cell Facility is proposed to be attached, and a street view image.

Full Description of Number and Dimensions of Facilities and/or Structures to be Installed: Applicant must include a full description of the number and dimensions of all Small Cell Facilities proposed to be installed and the Wireless Support Structure, either new or existing, to be utilized for each Small Cell Facility.

Site and Other Plans and Structural Calculations: Applicant must include fully dimensioned site plans, elevation drawings and structural calculations prepared, sealed, stamped, and signed by a Professional Engineer licensed and registered by the State of Ohio. Drawings must depict any existing Small Cell Facilities with all existing transmission equipment and other improvements, the proposed facility with all proposed transmission equipment and other improvements and the legal boundaries of the existing right-of-way, and any associated access and utility easements.

Fully dimensioned site plans shall indicate the spacing from existing curb, driveways, sidewalks, light poles, and any other poles or appurtenances. A traffic control plan and/or other plans may also be required based on the proposed scope of work.

Photo Simulations: Applicant must include photo simulations from at least two reasonable line-of-site locations in the vicinity of the proposed project site. Photo simulations must be included with the site plans on a separate sheet.

Photo simulations must include cabling/conduit, the RF warning and node ID stickers and equipment offset from the pole. Ensure photo simulations accurately show smaller equipment items such as duplexers, ground buss bars, PCX, or J-Boxes.

Upon request applicant shall provide photographs, if any, of other locations utilizing the same or substantially similar Small Cell Facilities and/or Wireless Support Structures.

Equipment Specifications: For all equipment depicted on the plans, the applicant must include (1) the manufacturer's name and model number; (2) physical dimensions, including without limitation, height, width, depth and weight with mounts and other necessary hardware; (3) photographs and/or renderings to scale of all equipment depicted in the plans; and (4) the ambient noise level generated from the equipment, if any.

b) Small Cell Facility Applications

Size Limits: Applicant must include scaled, dimensioned drawings or pictures with calculations to show strict conformity to the size limitations for a Small Cell Facility.

Confirmation of Compliance with State and Federal Environmental Regulations: Applicant shall certify that the proposed Small Cell Facility and/or new Wireless Support Structure fully comply with all State and federal environmental regulations.

RF Compliance Audit: Applicant must submit a sworn affidavit prepared and signed by a licensed RF engineer with knowledge about the proposed project that affirms the proposed project will be compliant with all applicable governmental regulations in connection with human exposure to radiofrequency emissions.

Electrical Service: Operator shall be responsible for obtaining any required electrical power service to the Small Cell Facility. Operator's electrical supply shall be separately metered from the City. Applicant must provide sealed engineered drawings for conduit size, circuit size, calculations for amp, distances running, etc. Applicant must obtain the appropriate Permits from the Building Department prior to installation of the Small Cell Facility.

c) Applications for New Wireless Support Structure

Distance Analysis: Applicant must provide an analysis showing that the proposed new Wireless Support Structure is spaced at least 250 feet from a pole supporting a Small Cell Facility, unless otherwise approved by the City in writing.

Size Limits: Applicant must provide scaled dimensional drawings with calculations to show strict conformity to the size and maximum height limitations as set forth in these guidelines.

d) Applications for Attachment to a Non-City-owned Wireless Support Structure

Owner's Authorization: Applicant must submit evidence sufficient to show that either (1) Applicant owns the proposed support structure; or (2) Applicant has obtained the owner's authorization to file the application.

e) Applications for Removal of a Small Cell Facility and/or a Wireless Support Structure

Contact Information: Applicant must provide contact information which includes the name of company seeking the Permit and the name of a designated point of contact along with

his/her mailing address, email address and phone number. Operator is responsible for providing updated contact information to the City when the contact information changes from that which was included in the application.

Proof of Agent Designation (if applicable): If the Applicant is serving as an agent for an Operator, the Applicant must provide written documentation of the agent designation signed by the Operator.

Consolidated Applications: An Applicant seeking to remove more than one Small Cell Facility or more than one Wireless Support Structure within the City may file a consolidated application for up to 5 Small Cell Facility requests or up to 5 Wireless Support Structure requests provided the requests grouped on a consolidated application only address substantially the same type of Small Cell Facilities or substantially the same type of Wireless Support Structures. (Note: The City may treat each request individually during application review and processing and when issuing a determination.)

Map: Applicant must include an aerial map showing the location of the proposed removal and a street view image.

Full Description of Number and Dimensions of Facilities and/or Structures to be Removed: Applicant must include a full description of the number and dimensions of all Small Cell Facilities and/or the support structure proposed to be removed.

Full Description of Restoration of the Right of Way: Applicant must include a full description of the steps to be involved in the removal and the actions that will be taken to restore the Right of Way.

Operator shall repair any damage to the right-of-way, any facilities located within the right-of-way, and/or the property of any third party resulting from operator's installation activities (or any other of operator's activities hereunder) within 10 calendar days following the date of such installation, at operator's sole cost and expense. Restoration of the right-of-way and such property must be to substantially the same, or better, condition as it was immediately before the date operator was granted a permit for the applicable location, or did the work at such location (even if operator did not first obtain a permit). This includes restoration or replacement of any damaged trees, shrubs, or other vegetation. Such repair, restoration, and replacement shall be subject to the sole, reasonable approval of the City.

Application Submittal Procedures

All applications should be submitted to the Department of Public Works with the

Attachment: 2020 Design, Construction, and Materials Specification Handbook (1575 : Design, Construction, and Materials Specification

application fee and required documents. The Department may establish regular hours in which applications may be submitted, but will generally receive applications Monday through Friday between 8:00 a.m. and 5:00 p.m., excluding holidays and subject to City personnel availability. The City will review all applications for completeness upon receipt. Applications may be rejected as incomplete upon discovery of deficiencies in the application.

Application Fee

The applicant shall submit the application fee of $250 per small cell facility. For the purposes of fee calculations a single small cell facility can be a single small cell antenna (and appurtenances), a single support structure, or a single support structure installed, modified, relocated or removed in conjunction with an antenna (and appurtenances) attached to the support structure. Fees for consolidated applications apply to each location and are cumulative. Additional building/electric permit fees may be applicable.

Timeline for Review

The City will complete its review of each duly submitted application and provide a determination within 90 days for an application to collocate, replace, or modify a Small Cell Facility or 120 days for an application to construct, modify, or replace a Wireless Support Structure associated with a Small Cell Facility.

Incomplete Applications

If the City determines during review that the application is incomplete, the City will notify the applicant and suspend further review until the missing items are provided. Consistent with state and federal requirements, the City will pause the review timeline for incomplete applications. If the City determines the application is still incomplete after receipt of additional application materials, the City will pause the timeline again until the application is deemed complete.

5. LOCATIONS OF SMALL CELL FACILITIES, RELATED GROUND EQUIPMENT, AND WIRELESS SUPPORT STRUCTURES

Most Preferable Locations

The following are the most preferred areas for new Small Cell Facilities.

a) *Industrial Areas,* if not adjacent to a municipal park or residential area.

b) *Regional Thoroughfares Rights of Way Areas* if not adjacent to a municipal park or

Attachment: 2020 Design, Construction, and Materials Specification Handbook (1575 : Design, Construction, and Materials Specification

residential area.

c) *Retail and Commercial Areas* if not adjacent to a municipal park or residential area.

Collocation Preference

It is the City's strong preference that whenever an applicant proposes to place a new Wireless Support Structure with a Small Cell Facility within 250 feet from an existing Wireless Support Structure the applicant either collocate with the existing facility or demonstrate that a collocation is either not technically feasible or space on the existing facility is not potentially available.

Least Preferable Locations

The following are the least preferred areas for new Small Cell Facilities.

a) *Residential Areas*
b) *Parks*
c) *Design Review Districts*

Order of Preference for Wireless Support Structures

The following list indicates the order of preference for Wireless Support Structures for Small Cell Facilities.

a) *Existing Utility Poles:* It is the City's preference that Small Cell Facilities be installed on existing Utility Poles (electric or telephone) or lashed onto existing telephone or electrical lines between existing Utility Poles.

b) *New Poles:* If existing poles have proven to be unavailable, the City prefers the installation of a new pole to serve as a Wireless Support Structure.

6. CONSIDERATION OF ALTERNATE LOCATIONS

The City reserves the right to propose an alternate Wireless Support Structure to the one proposed in the application and/or to propose an alternate location for a new Wireless Support Structure within one hundred feet of the proposed location or within a distance that is equivalent to the width of the right-of-way in or on which the new Wireless Support Structure is proposed, whichever is greater, which the operator shall use if it has the right to use the alternate location on reasonable terms and conditions and the alternate location does not impose technical limits or additional costs.

Attachment: 2020 Design, Construction, and Materials Specification Handbook (1575 : Design, Construction, and Materials Specification

7. GUIDELINES ON PLACEMENT

Generally, an applicant shall construct and maintain Small Cell Facilities and Wireless Support Structures in a manner that does not (1) obstruct, impede, or hinder the usual travel or public safety on a right-of-way; (2) obstruct the legal use of a right-of-way by other utility providers; (3) violate nondiscriminatory applicable codes; (4) violate or conflict with the City's Codified Ordinances or these design guidelines; and (5) violate the federal Americans with Disabilities Act.

The City desires to promote cleanly organized and streamlined facilities using the smallest and least intrusive means available to provide wireless services to the community. Generally, a Small Cell Facility and/or Wireless Support Structure shall match and be consistent with the materials and finish of the adjacent municipal poles of the surrounding area adjacent to their location. In the absence of adjacent municipal poles, the Wireless Support Structure shall match the materials and finish of the adjacent utility poles.

Antennas on Existing or Replaced Utility Poles

The antenna(s) associated with collocation of a Small Cell Facility on existing or replaced utility poles must have concealed cable connections, antenna mount, and other hardware. The maximum dimensions for antennas shall not be more than 6 cubic feet in volume, including any enclosure for the antenna.

Right-of-Way

Small Cell Facilities and Wireless Support Structures and related equipment shall be placed, as much as possible, in line with other utility features and in a location that minimizes any obstruction, impediment, or hindrance to the usual travel or public safety on a right-of-way.

Height above Ground

a) *Small Cell Facilities:* Small Cell Facilities shall be installed at least 8 feet above the ground. If a Small Cell Facility attachment is projecting toward the street, for the safety and protection of the public and vehicular traffic, the attachment shall be installed no less than 16 feet above the ground.

b) *New Wireless Support Structures:* In areas where there are no Wireless Support Structures or utility poles taller than 30 feet in height above ground level and the maximum allowable height for building construction in the underlying zoning district is 35 feet in height above ground level or less, the overall height of a new Wireless Support Structure and any collocated antennas shall not be more than 35

Attachment: 2020 Design, Construction, and Materials Specification Handbook (1575 : Design, Construction, and Materials Specification

feet in height above ground level. This applies to zoning districts A-1, B-1, C-1, C-4, and R.

In all other areas, the overall height of a new Wireless Support Structure and any collocated antennas shall not be more than 40 feet in height above ground level. This applies to zoning districts C-2, C-3/3A, D-1, M-1, M-2, SE, and ST.

c) *Existing Wireless Support Structures:* For an existing Wireless Support Structure, the antenna and any associated shroud or concealment material are permitted to be collocated at the top of the existing Wireless Support Structure and shall not increase the height of the existing Wireless Support Structure by more than 5 feet (one-time increase).

Protrusion

No protrusions from the outer circumference of the existing structure or pole shall be more than 1 foot. The pole and all attachments to the pole that are projecting, or any equipment or appurtenance mounted on the ground, shall comply with Americans with Disabilities Act and shall not obstruct an existing or planned sidewalk or walkway.

Location of Equipment - General

Small Cell Facilities and related equipment shall not impede pedestrian or vehicular traffic in the right-of-way. If any Small Cell Facility or Wireless Support Structure is installed in a location that is not in accordance with the plans approved by the Department of Public Works, impedes pedestrian or vehicular traffic and/or or does not comply or otherwise renders the right-of-way non-compliant with applicable laws, including the Americans with Disabilities Act, then the operator shall promptly remove the Small Cell Facilities and/or Wireless Support Structure. If the operator does not complete removal within 30 days of notice, the City will remove it and bill the operator for the actual and direct cost of the removal.

The applicant is required to incorporate ambient noise suppression measures and/or required to place the equipment in locations less likely to impact adjacent residences or businesses to ensure compliance with all applicable noise regulations.

a) *Utility Lines:* Service lines must be undergrounded whenever feasible to avoid additional overhead lines. For metal poles, undergrounded cables and wires must transition directly into the pole base without any external junction box.

b) *Spools and Coils:* To reduce clutter and deter vandalism, excess fiber optic or coaxial cables for Small Cell Facilities shall not be spooled, coiled or otherwise

Attachment: 2020 Design, Construction, and Materials Specification Handbook (1575 : Design, Construction, and Materials Specification

stored on the pole except within the approved enclosure such as a cage or cabinet.

c) *Above-Ground Conduit:* On wood poles, all above-ground wires, cables and connections shall be encased in the smallest section or smallest diameter PVC channel, conduit, u-guard, or shroud feasible, with a maximum dimension of a 4-inch diameter. Such conduit shall be finished in zinc, aluminum or stainless steel, or colored to match those metal finishes.

Location of Ground Mounted Equipment

Ground equipment should be minimal and as unobtrusive as possible. It should be placed to minimize any obstruction, impediment, or hindrance to the usual travel or public safety on a right-of-way, maximize the line of sight required to add to safe travel of vehicular and pedestrian traffic, maximize that line of sight at street comers and intersections, and minimize hazards at those locations. The City may deny a request that negatively impacts vehicular and/or pedestrian safety.

The equipment shroud or cabinet must contain all the equipment associated with the facility other than the antenna. All cables and conduits associated with the equipment must be concealed from view, routed directly through the metal pole (with the exception of wood power poles), and undergrounded between the pole and the ground-mounted cabinet.

Location of Pole Mounted Equipment

All pole mounted equipment must be installed as flush to the pole as possible, using stainless steel banding straps. When the straps are attached to a metal pole, they must match the color of the pole. Through-bolting or use of lag bolts is prohibited. All pole mounted equipment shall be located as close together as possible and if possible, on the same side of the pole.

When pole mounted equipment is either permitted or required, all equipment other than the antenna(s), electric meter, and disconnect switch must be concealed within an equipment cage. The equipment cabinet may not extend more than 12 inches from the face of the pole. The equipment cabinet must be non-reflective, colored to match the existing pole if attached to a metal pole, and in the color of brushed aluminum if attached to a wood pole. Equipment cabinets should be mounted as flush to the pole as possible. Any standoff mount for the equipment cabinet may not exceed 4 inches.

a) *Electric Meter:* The City strongly encourages site operators to use flat-rate electric service when it would eliminate the need for a meter. When a meter is necessary, site operators shall use the smallest and least intrusive electric meter available. Whenever permitted by the electric service provider, the electric meter base should

Attachment: 2020 Design, Construction, and Materials Specification Handbook (1575 : Design, Construction, and Materials Specification

be painted to match the pole.

b) *Telephone/Fiber Optic Utilities:* Cabinets for telephone and/or fiber optic utilities may not extend more than 12 inches from the face of the pole, and must be painted, wrapped, or otherwise colored to match the pole. Microwave or other wireless backhaul is discouraged when it would involve a separate and unconcealed antenna.

Undergrounded Equipment Vaults

Equipment in an environmentally controlled underground vault may be required in some areas.

New Wireless Support Structures

a) *Spacing:* The City strongly discourages more than one new Wireless Support Structure per block and will not approve more than one per 250 feet on each side of the street to minimize the hazard of poles adjacent to roadways and to minimize visual clutter and distractions to vehicular traffic. An exemption may be granted if the applicant can demonstrate that this restriction will have the effect of preventing wireless service to the location. Wireless Support Structures shall be spaced apart from Utility Poles or Wireless Support Structures supporting Small Cell Facilities at the same spacing between Utility Poles in the immediate proximity.

If multiple requests are received to install two or more poles that would violate the spacing requirement or to collocate two or more Small Cell Facilities on the same Wireless Support Structure, priority will be given to the first request received that meets these guidelines.

b) *Alignment with Other Poles:* The centerline of any new Wireless Support Structure must be aligned, as much as possible, with the centerlines of existing poles on the same street segment, but only if the new structure's height does not conflict with overhead power utility lines and facilities.

c) *General Restrictions on New Wood Poles:* In all locations, the City reserves the right to require a metal pole rather than a wood pole based on the build and/or natural environmental character of the proposed site location.

d) *Wood Pole Footings and Foundations:* All new wood poles must be direct buried to a depth determined, stamped, sealed, and signed by a professional engineer licensed and registered by the State, and subject to the City's review and approval.

e) *Metal Pole Footings and Foundations:* All new metal poles must be supported with a reinforced concrete pier. The design including the pier, footings, and anchor bolts shall be stamped, sealed, and signed by a professional engineer licensed and

registered by the State, and subject to the City's review and approval. All anchor bolts must be concealed from public view with an appropriate pole boot or cover subject to the City's prior approval.

f) *Metal Pole Material:* All metal poles must be constructed from hot-dip galvanized steel or other corrosion-resistant materials approved by the City and finished in accordance with these guidelines to avoid rust stains on adjacent sidewalks, buildings, or other improvements.

g) *Metal Pole Finish:* Metal poles must be painted in accordance with industry and manufacturer guidelines. The Applicant may select a paint or powder coat system in compliance with ATSM standards.

h) *Lighting, Planters, Flags, and Banners:* The City may require the applicant to install functional streetlights and/or brackets to hold hanging flower planters, flags and/or banners when technically feasible and the City determines that such additions will enhance the overall appearance and usefulness of the proposed facility. The City, without further notice to any party, may install hanging flower planters, flags and/or banners utilizing the brackets described in this paragraph.

8. UNDERGROUNDING REQUIREMENTS

The City may request to install structures and facilities in the right-of-way in an area where the City has required or has designated all structures and facilities except those owned by the City to be placed underground or elsewhere in the right-of-way or a utility easement. These areas are easily identifiable as those locations where electric has been placed underground; however, if an applicant is uncertain as to whether such facilities have been placed underground in the area, the applicant should contact the City for clarification before apply for or installing any Wireless Support Structures and/or Small Cell Facilities in the area. The applicant may request a waiver if the operator is unable to achieve its service objective using a location in the right-of-way where the prohibition does not apply, in a utility easement the operator has the right to access, or in or on other suitable locations or structures made available by the City at reasonable rates, fees, and terms.

9. AESTHETIC REQUIREMENTS

Concealment

a) *New Wireless Support Structures:* It is the City's preference that all new Wireless Support Structures be as unobtrusive as practicable and fit the character of the surrounding development.

b) *Small Cell Facilities:* Small Cell Facilities shall be concealed or enclosed, utilizing

Attachment: 2020 Design, Construction, and Materials Specification Handbook (1575 : Design, Construction, and Materials Specification

stealth and/or other concealment techniques, to the fullest extent possible in an equipment box, cabinet, or other unit that may include ventilation openings. Unless approved by the City in writing, there shall be no external cables and wires hanging off a pole. The approved Small Cell Facility cable or wiring shall be sheathed or enclosed in conduit, so that wires are protected and not visible and/or visually minimized to the extent possible.

c) *Equipment Enclosures:* Equipment enclosures, including electric meters, shall be as small as possible. Ground-mounted equipment shall incorporate concealment elements into the proposed design. Concealment may include, but shall not be limited to, landscaping, strategic placement in less obtrusive locations, etc.

d) *Landscaping:* Landscape screening may be required and maintained around ground-mounted equipment enclosures. The planting quantity and size should be such that 100% screening is achieved within two years of installation. The City may grant an exemption from this landscaping requirement based on the characteristics of the specific location for the equipment enclosure. Tree "topping" or the improper pruning of trees is prohibited. Any proposed pruning or removal of trees, shrubs or other landscaping already existing in the right-of-way must be noted in the application and must be approved by the City.

When underground vaults are proposed, they shall be located to minimize disruption to the placement of street trees. Adequate planting depth shall be provided between the top of the vault and the finished grade to allow plants to grow in a healthy condition.

Allowed Colors

All colors shall match the background of any Wireless Support Structure that the facilities are located upon. In the case of existing wood poles, finishes of conduit shall be zinc, aluminum or stainless steel, or colored to match those metal finishes and equipment cabinets shall be the color of brushed aluminum. Ground mounted equipment cabinets shall be the color of brushed aluminum, or such other color that matches the subject Wireless Support Structure and Wireless Facilities, as may be requested by the City.

Signage/Lights/Logos/Decals/Cooling Fans

a) *Signage:* Operator shall post its name, location identifying information and emergency telephone number in an area on the Small Cell Facility at eye level that is visible to the public. Signage required under this section shall not exceed 4" x 6", unless otherwise required by law (e.g. RF ground notification signs) or the City. If no cabinet exists, signage shall be placed on the base of the pole.

Attachment: 2020 Design, Construction, and Materials Specification Handbook (1575 : Design, Construction, and Materials Specification

b) *Lights:* New Small Cell Facilities and Wireless Support Structures shall not be illuminated, except in accordance with state or federal regulations, or unless illumination is integral to the camouflaging strategy such as design intended to look like a street light pole.

c) *Logos/Decals:* Operator shall remove or paint over unnecessary equipment manufacturer decals. New Small Cell Facilities and Wireless Support Structures shall not include advertisements and may only display information required by a federal, state or local agency. Operators shall also utilize the smallest and lowest visibility radio-frequency (RF) warning sticker required by government or electric utility regulations and place the RF sticker as close to the antenna as possible.

d) *Cooling Fans:* In residential areas, use a passive cooling system. In the event that a fan is absolutely necessary, use a cooling fan with a low noise profile.

10. INSTALLATION AND INSPECTION

a) *Completion within 180 days:* The collocation or construction of a new Wireless Support Structure for which a permit is granted shall be completed within 180 days after issuance of the permit unless the City and the applicant mutually agree to extend this period. The City will agree to an extension if the delay is caused by (a) make-ready work for a City-owned facility or (b) the lack of commercial power availability at the site, provided that the operator has made a timely request within 60 days after the issuance of the permit for commercial power. The additional time to complete installation may not exceed 365 days after the issuance of the permit.

b) *Procedure for Request for Extension of Time:* In situations when completion will not occur within 180 days after issuance of the permit, the applicant may request an extension of time. Such extension request will include the length of time being requested and the reason for the delay. The extension must be filed with the Department of Public Works.

Existing Infrastructure - Restoration Requirements

The permittee and/or its subcontractors shall leave the streets, alleys and other public places where work is done in as good or better condition or repair as they were before such work was commenced and to the reasonable satisfaction of the City.

11. INTERFERENCE WITH OPERATIONS

No Liability

The City shall not be liable to the operator by reason of inconvenience, annoyance, or injury to the Small Cell Facilities, Wireless Support Structures, and related ground or pole mounted

Attachment: 2020 Design, Construction, and Materials Specification Handbook (1575 : Design, Construction, and Materials Specification

equipment or activities conducted by the operator therefrom, arising from the necessity of repairing any portion of the right-of-way, or from the making of any necessary alteration or improvements, in or to, any portion of the right-of-way, or in, or to, City's fixtures, appurtenances, or equipment.

12. REQUIREMENTS FOR REMOVAL, REPLACEMENT, MAINTENANCE, AND REPAIR

Removal or Relocation Required for City Project

Operator shall remove and relocate the permitted Small Cell Facility and/or Wireless Support Structure at the operator's sole expense to accommodate construction of a public improvement project by the City.

If operator fails to remove or relocate the Small Cell Facility and/or Wireless Support Structure or portion thereof as requested by the City within 120 days of the City's notice, then the City shall be entitled to remove the Small Cell Facility and/or Wireless Support Structure, or portion thereof at operator's sole cost and expense, without further notice to operator.

Operator shall, within 30 days following issuance of invoice for the same, reimburse the City for its reasonable expenses incurred in the removal (including, without limitation, overhead and storage expenses) of the Small Cell Facilities and/or Wireless Support Structure, or portion thereof.

Removal Required by City for Safety and Imminent Danger Reasons

Operator shall, at its sole cost and expense, promptly disconnect, remove, or relocate the applicable Small Cell Facility and/or Wireless Support Structure within the time frame and in the manner required by the City if the City reasonably determines that the disconnection, removal, or relocation of any part of a Small Cell Facility and/or Wireless Support Structure (a) is necessary to protect the public health, safety, welfare, or City property, or (b) operator fails to obtain all applicable licenses, permits, and certifications required by law for its Small Cell Facility and/or Wireless Support Structure.

If the Public Works Director reasonably determines that there is imminent danger to the public, then the City may immediately disconnect, remove, or relocate the applicable Small Cell Facility and/or Wireless Support Structure at the Operator's sole cost and expense.

Attachment: 2020 Design, Construction, and Materials Specification Handbook (1575 : Design, Construction, and Materials Specification

Removal/Abandonment of Facilities

Operator shall remove a Small Cell Facility and/or Wireless Support Structure when such facilities are abandoned regardless of whether or not it receives notice from the City. Unless the City sends notice that removal must be completed immediately to protect public health, safety, and welfare, the removal must be completed within the earlier of 60 days of the Small Cell Facility and/or Wireless Support Structure being abandoned, or within 60 days of receipt of written notice from the City. When operator abandons permanent structures in the right-of-way, the operator shall notify the City in writing of such abandonment and shall file with the City the location and description of each Small Cell Facility and/or Wireless Support Structure abandoned. Prior to removal, operator must make application to the City and receive approval for such removal.

Operator must obtain a right-of-way permit for the removal. The City may require the operator to complete additional remedial measures necessary for public safety and the integrity of the right-of-way.

The City may, at its option, allow a Small Cell Facility and/ or Wireless Support Structure to remain in the right-of-way and coordinate with the operator to transfer ownership of such Small Cell Facility and/ or Wireless Support Structure to the City, instead of requiring the operator to remove such Small Cell Facility and/or Wireless Support Structure.

Restoration

Operator shall repair any damage to the right-of-way, any facilities located within the right-of-way, and/or the property of any third party resulting from operator's removal or relocation activities (or any other of operator's activities hereunder) within 10 calendar days following the date of such removal or relocation, at operator's sole cost and expense. Restoration of the right-of-way and such property must be to substantially the same, or better, condition as it was immediately before the date operator was granted a permit for the applicable location, or did the work at such location (even if operator did not first obtain a permit). This includes restoration or replacement of any damaged trees, shrubs, or other vegetation. Such repair, restoration, and replacement shall be subject to the sole, reasonable approval of the City.

13. GENERAL PROVISIONS

As-Built Maps and Records

Operator shall maintain accurate maps and other appropriate records of its Small Cell Facilities and Wireless Support Structures as they are actually constructed in the right-

of-way or any other City-owned property. Operator shall maintain a list of its Small Cell Facilities and Wireless Support Structures and provide the City an inventory of locations within 10 days of installation. The inventory shall include GIS coordinates (NAD 83, Ohio State Planes, South Zone, US feet), date of installation, type of Wireless Support Structure used for installation, Wireless Support Structure owner and description/type of installation for each Small Cell Facility and Wireless Support Structure. Operator will provide additional maps to the City upon request.

Upon City's written request, operator shall provide a cumulative inventory within 30 days of the City's request. Concerning Small Cell Facilities and Wireless Support Structures that become inactive, the inventory shall include the same information as active installations in addition to the date the Small Cell Facility and/or Wireless Support Structure was deactivated and the date the Small Cell Facility and/or Wireless Support Structure was removed from the right-of-way. The City may compare the inventory to its records to identify any discrepancies.

Generally Applicable Health and Safety Regulations

All Small Cell Facilities and Wireless Support Structures shall be designed, constructed, operated, and maintained in compliance with all generally applicable health and safety regulations, including without limitation all applicable federal, state, and local regulations for human exposure to RF emissions.

Tree Maintenance

Operator, its contractors, and agents shall obtain written permission from the City before trimming trees in the right-of-way hanging over its Small Cell Facility and/or Wireless Support Structure to prevent branches of such trees from contacting attached Small Cell Facility. When trimming such trees on private property, the operator, its contractors, and agents shall notify the City and obtain written permission from the property owner. When directed by the City, operator shall trim under the supervision and direction of the City. The City shall not be liable for any damages, injuries, or claims arising from operator's actions under this section.

Minor Technical Exceptions

The City recognizes that in some circumstances strict compliance with these guidelines may result in undesirable aesthetic outcomes and that minor deviations should be granted when the need for such deviation arises from circumstances outside the applicant's control.

Attachment: 2020 Design, Construction, and Materials Specification Handbook (1575 : Design, Construction, and Materials Specification

Waivers if Requirements have the Effect of Prohibiting the Provision of Wireless Service to a Location

In the event that any applicant asserts that strict-compliance with any provision in these design guidelines, as applied to a specific proposed Small Cell Facility, would effectively prohibit the provision of personal wireless services, the City may grant a limited exemption from strict compliance.

Graffiti Abatement

As soon as practical, but not later than 14 calendar days from the date operator receives notice thereof, operator shall remove all graffiti on any of its small cell facilities and/or wireless support structures located in the right of way. The City may agree to an extension of time for abatement when necessitate by the need to order replacement equipment when such equipment is ordered in a timely manner.

If the operator fails to comply with the notice, the City Manager shall thereupon cause the graffiti to be removed, and for such purpose may employ the necessary labor to carry out the provisions of this section. Costs incurred by the City for removing such graffiti shall be entered upon the tax duplicate and shall be a lien upon such lands and property.

Attachment: 2020 Design, Construction, and Materials Specification Handbook (1575 : Design, Construction, and Materials Specification

STANDARD CONSTRUCTION DRAWINGS

Attachment: 2020 Design, Construction, and Materials Specification Handbook (1575 : Design, Construction, and Materials Specification

Table of Contents

DATE: 06/01/2020 | SCALE: NONE | FILE: 2020-00i.DWG

Page	Drawing
1	Modified Type 3 & 3A Catch Basins
2	Trench Plate Detail
3	Trench Detail
4	Standard Pre-Cast Concrete Drywell
5	Sump or Downspout Drain
6	Fairfield Roll-Type Curb and Gutter
7	Modified Type 6 "Lawn" Curb, As Per Plan
8	Item 452 Non-Reinforced Concrete Pavement Drive Apron
9	Item 608 Concrete Sidewalk
10	Full Depth Asphalt Concrete Pavement
11	Utility Service Location Designation
12	Backflow Preventer General Setting
13	Indoor Meter - Commercial Meter and BFP
14	Outdoor Meter - Commercial Meter and BFP
15	Water Service Installation
16	Residential Meter Pit
17	Fire Hydrant Installation (Page 1/2)
18	Fire Hydrant Installation (Page 2/2)
19	Casing Pipes
20	Restrained Joint Lengths
21	Thrust Blocking
22	Interior Fire Line Double Check Detector Assembly
23	Fire Line Meter Vault with Double Check Detector Assembly
24	Service Line Details
25	Force Main HDPE Lateral Assembly with Stainless Steel Curb Stop (1-1/4" & 1-1/2")
26	Force Main PVC Lateral Assembly with Stainless Steel Curb Stop (1-1/4" & 1-1/2")
27	Two-Way Clean Out (For Sanitary and Storm Applications)
28	Gravity Sewer Creek Crossing
29	Standard Manhole (Page 1/2)
30	Standard Manhole (Page 2/2)
31	Standard Control Manhole
32	Dead End Manhole
33	Drop Manhole
34	Pipe Connections
35	Force Main Drop Connections in Existing Manholes
36	Force Main Lateral Installation
37	Force Main Grinder Pump Installation
38	Force Main Terminal Flushing Connection
39	Force Main Flushing Connection on LPSS Main
40	Grease Interceptor - Oil/Water Separator (Baffled)
41	Exterior Door Identification

Attachment: 2020 Design, Construction, and Materials Specification Handbook (1575 : Design, Construction, and Materials Specification

FAIRFIELD OHIO

STANDARD CONSTRUCTION DRAWINGS

Modified Type 3 & Type 3A Catch Basins

DATE: 05/04/2020	SCALE: NONE	FILE: 2020-001.DWG

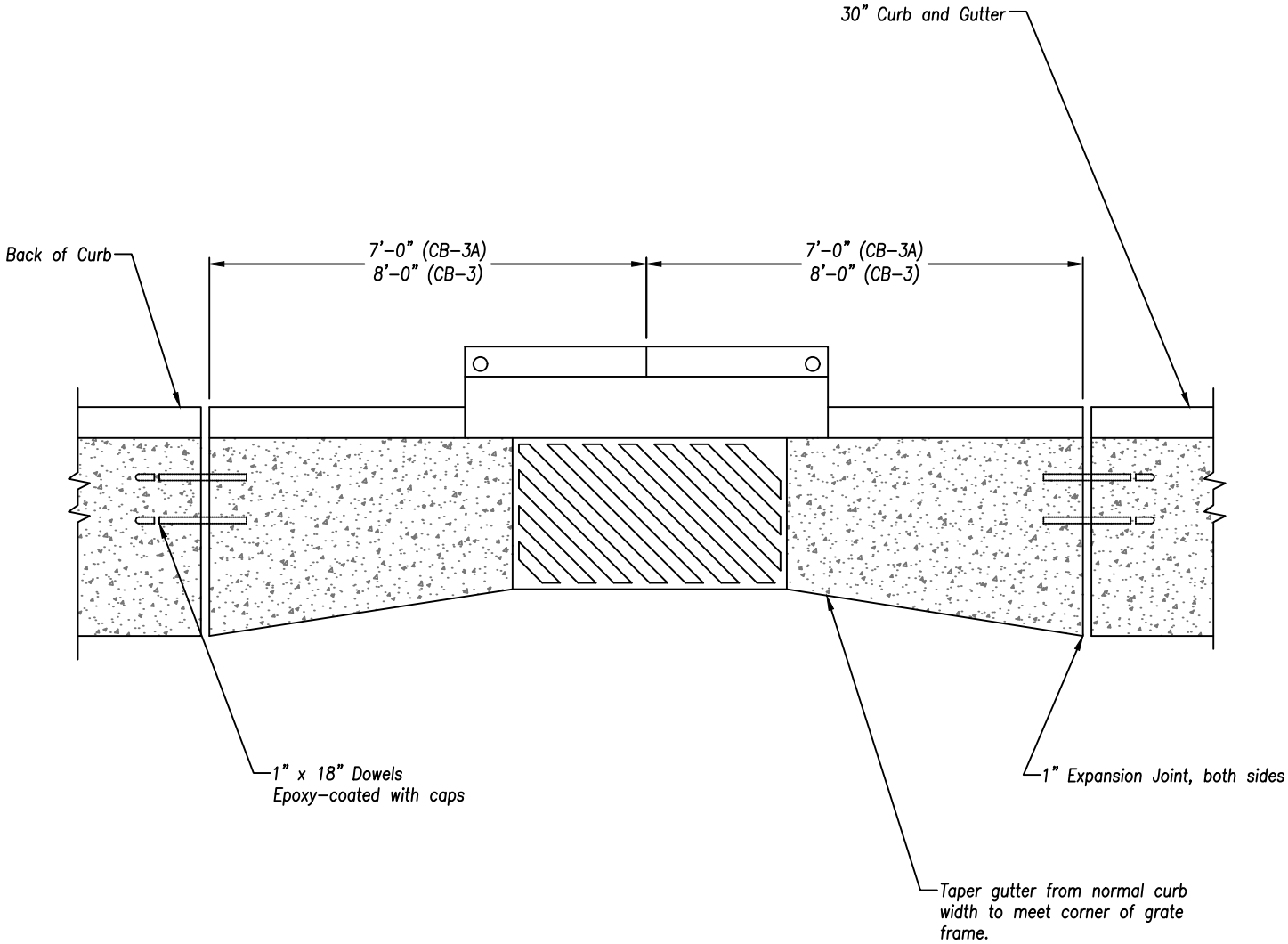

Notes:
1. Vane grates must be used at slopes greater than 2%.
2. All grates must be bicycle-safe.

Attachment: 2020 Design, Construction, and Materials Specification Handbook (1575 : Design, Construction, and Materials Specification

Trench Plate Detail

DATE: 05/04/2020	SCALE: NONE	FILE: 2020-002.DWG

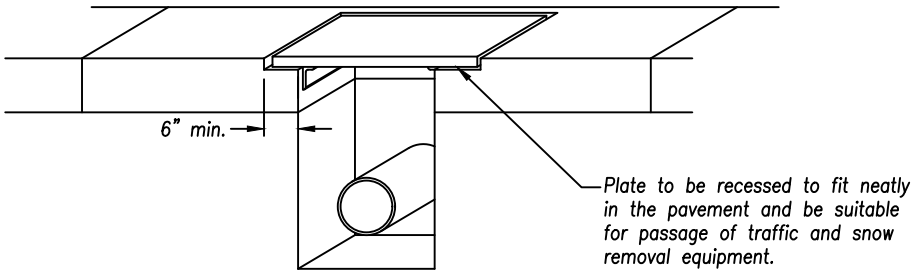

Higher Speed / Volume Applications

45 MPH or Greater
Greater Than 6000 ADT

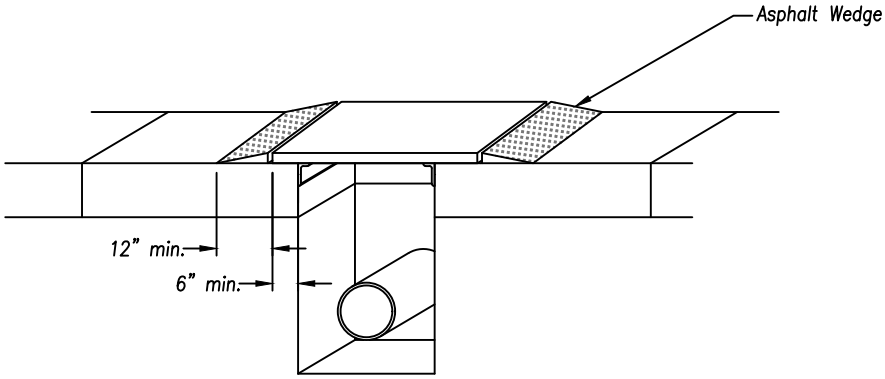

Lower Speed / Volume Applications

40 MPH or Less
6000 ADT or Less

Notes:

1. For trenches excavated within City roads, trenches shall be plated in accordance with this standard drawing. The intent of the drawing is to provide the availability of all traffic lanes, expecially during peak traffic periods.
2. Excavation must be backfilled to the bottom of the plate if left unattended for over 4 hours.
3. City reserves the right to require recessed plates during winter months.

Attachment: 2020 Design, Construction, and Materials Specification Handbook (1575 : Design, Construction, and Materials Specification

FAIRFIELD OHIO

STANDARD CONSTRUCTION DRAWINGS

Trench Detail

DATE: 05/29/2020 | SCALE: NONE | FILE: 2020-003.DWG

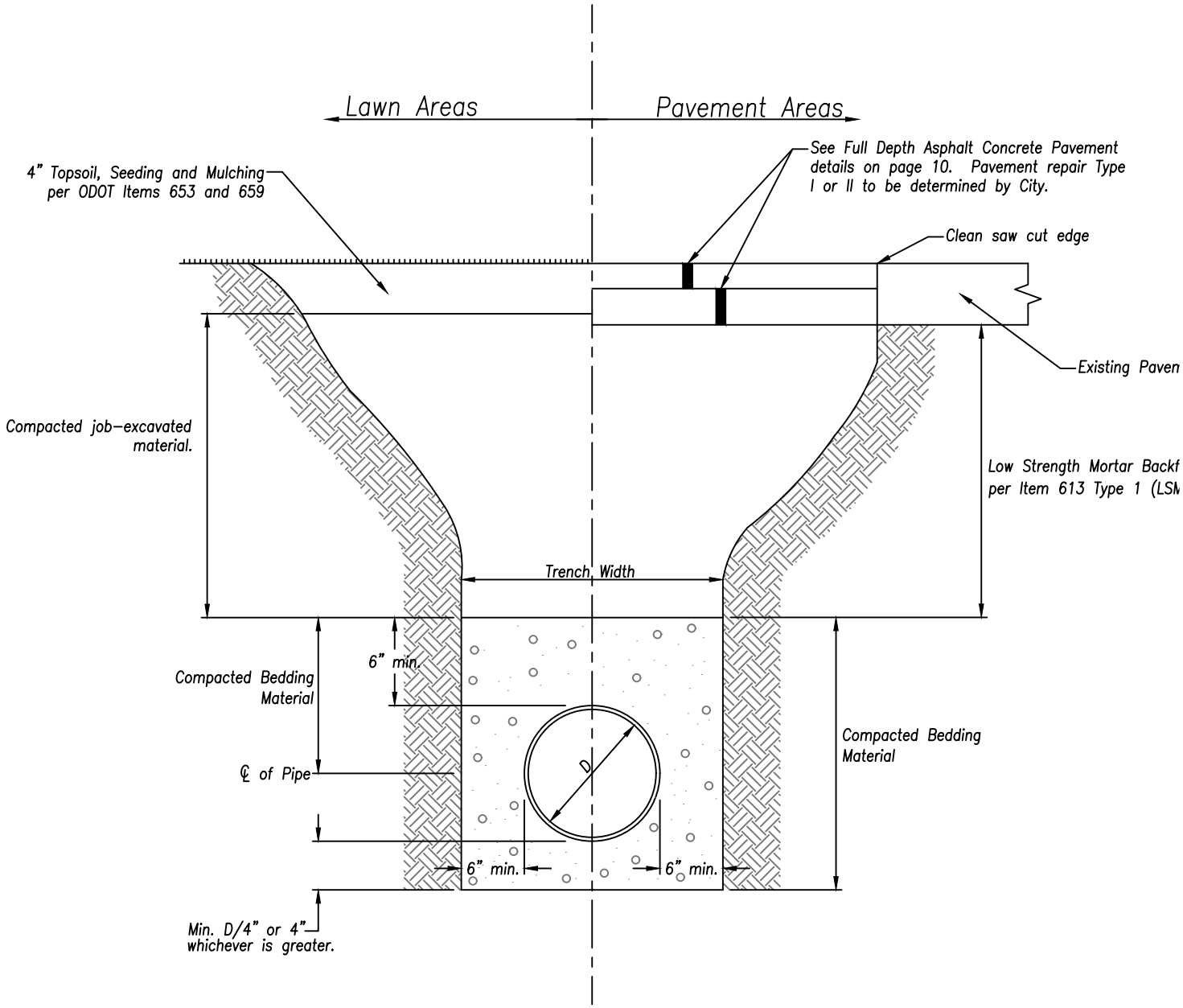

Notes:

1. Acceptable bedding material by application:
   1.1. Storm and Sanitary Sewer: 8's, 9's, or washed 57's
   1.2. Water Main: 8's or 9's
2. Other bedding not listed here are considered non-standard and must be approved in writing prior to use.
3. For new construction; Trench to be backfilled with granular backfill to street subgrade within roadway limits. Granular backfill to be compacted to 90% of maximum density in 8" maximum lifts.
4. Trench to be backfilled with low strength mortar backfill to street subgrade within existing street limits.
5. Additional bedding over the pipe may be required due to site soil conditions.
6. Bed pipe in specified granular bedding material. To be hand tamped over pipe.
7. Under existing sewers, water lines, gas lines, telephone cable, and electrical conduits, backfill with granular bedding material to the spring line of the existing utility lines.
8. Water main shall be installed in a separate trench from the sanitary sewer and will be a minimum of 10' measured horizontally, from outside diameter to outside diameter. If this cannot be achieved, it may be permitted to place the water in a separate trench or on an undisturbed earth shelf located on one side and at an elevation so that bottom of the water main is at least 18" above the top of the sewer.

Attachment: 2020 Design, Construction, and Materials Specification Handbook (1575 : Design, Construction, and Materials Specification

FAIRFIELD OHIO

STANDARD CONSTRUCTION DRAWINGS

Standard Pre-Cast Concrete Drywell

DATE: 05/04/2020	SCALE: NONE	FILE: 2020-004.DWG

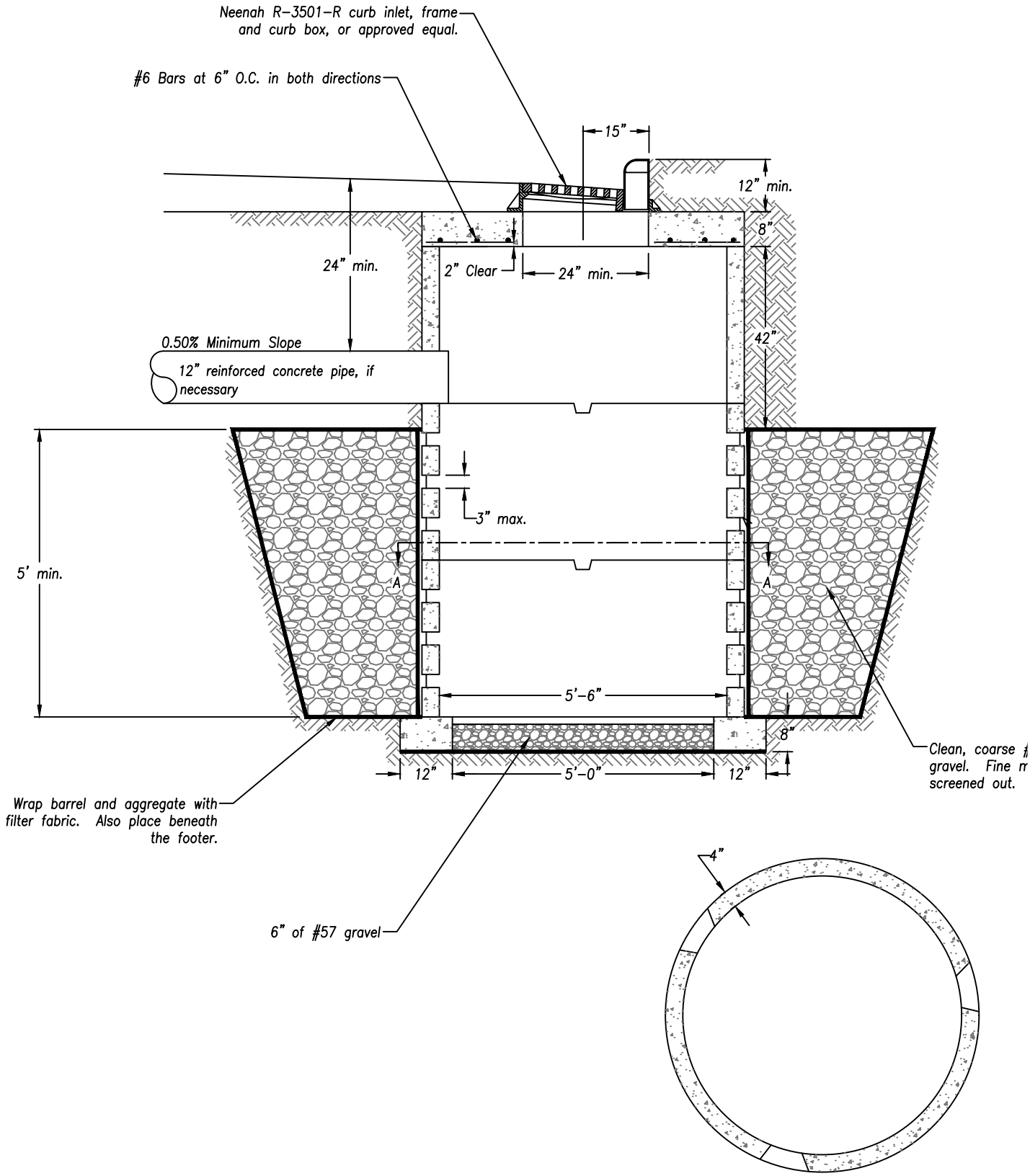

SECTION A-A

Notes:

1. If drywell does not reach gravel substrate, under cut until existing gravel substrate is reached. If no gravel is reached, backfill below drywell with washed gravel. Depth to be determined by Geotechnical Engineer.
2. 24" hole in top slab to be offset to allow for adjustments.
3. All construction debris, mortar, etc. shall be removed from the bottom of drywell.
4. Placement and compaction requirements as per ODOT Item 611.06.

Attachment: 2020 Design, Construction, and Materials Specification Handbook (1575 : Design, Construction, and Materials Specification

Sump or Downspout Drain

DATE: 05/04/2020 | SCALE: NONE | FILE: 2020-005.DWG

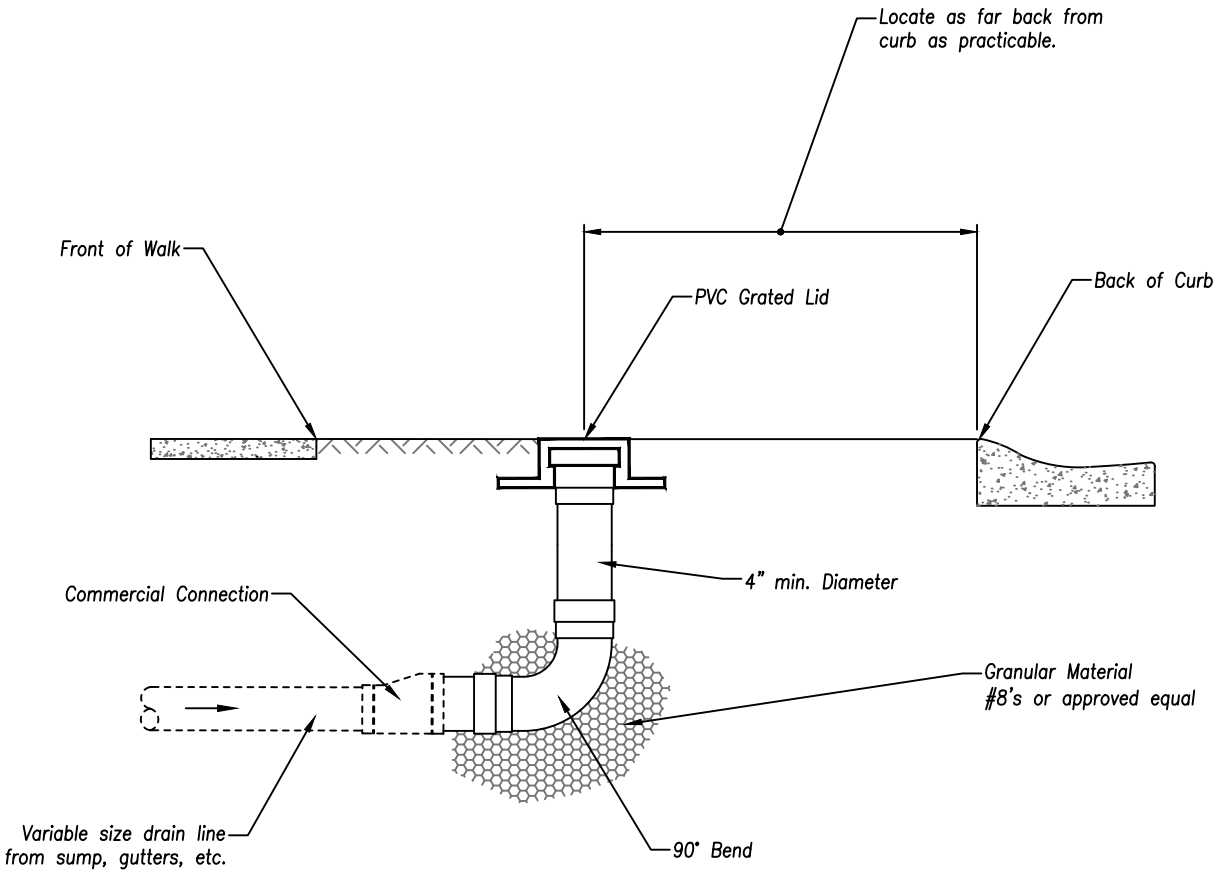

Attachment: 2020 Design, Construction, and Materials Specification Handbook (1575 : Design, Construction, and Materials Specification

FAIRFIELD OHIO

STANDARD CONSTRUCTION DRAWINGS

Fairfield Roll-Type Curb and Gutter

DATE: 05/04/2020	SCALE: NONE	FILE: 2020-006.DWG

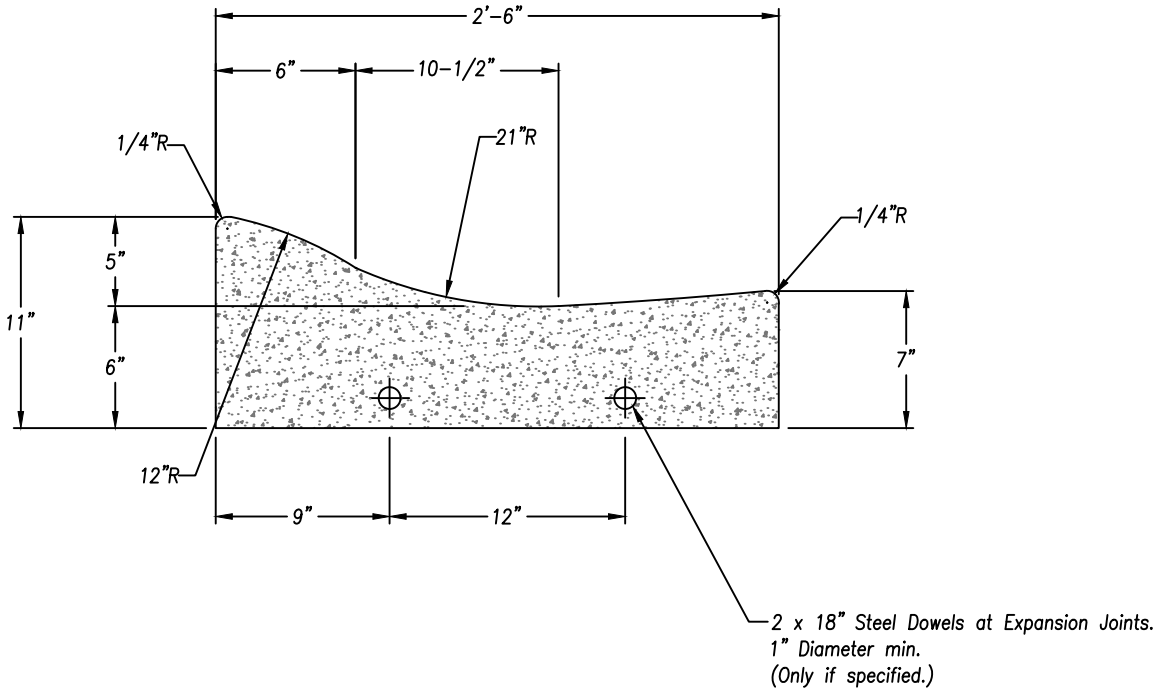

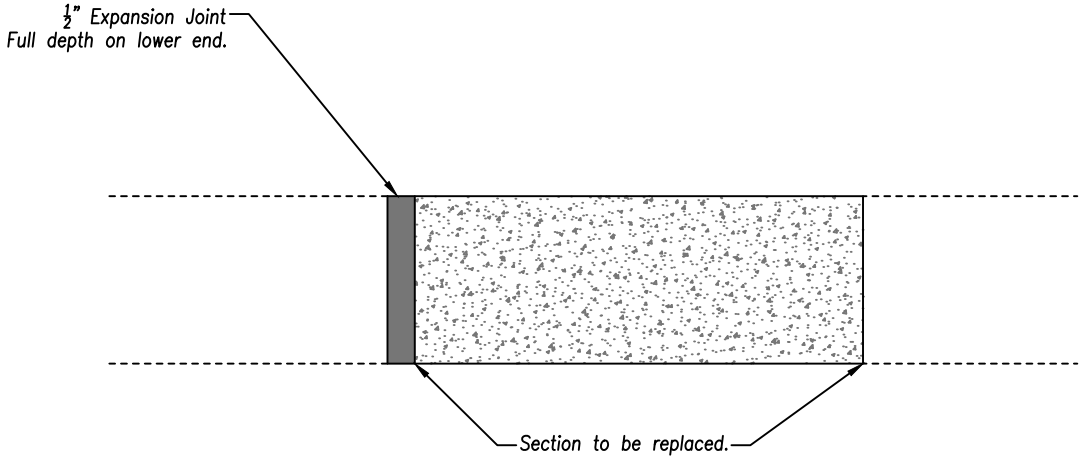

Notes:
1. Construct ramps to meet required slopes and existing conditions.
2. Curb sections must be removed to the nearest joint if joint is less than four feet away.

Attachment: 2020 Design, Construction, and Materials Specification Handbook (1575 : Design, Construction, and Materials Specification

FAIRFIELD OHIO

STANDARD CONSTRUCTION DRAWINGS

Modified Type 6 "Lawn" Curb, As Per Plan

DATE: 05/04/2020	SCALE: NONE	FILE: 2020-007.DWG

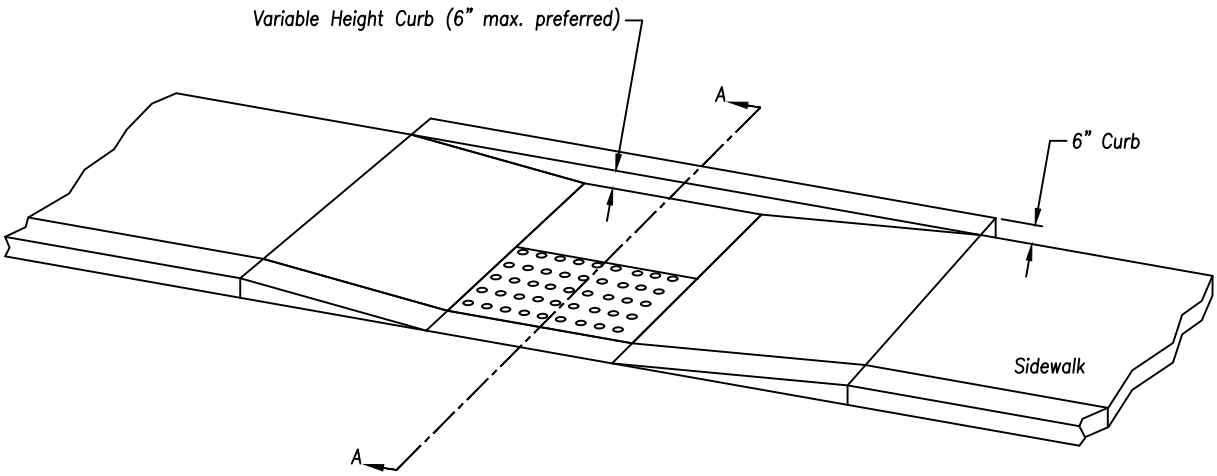

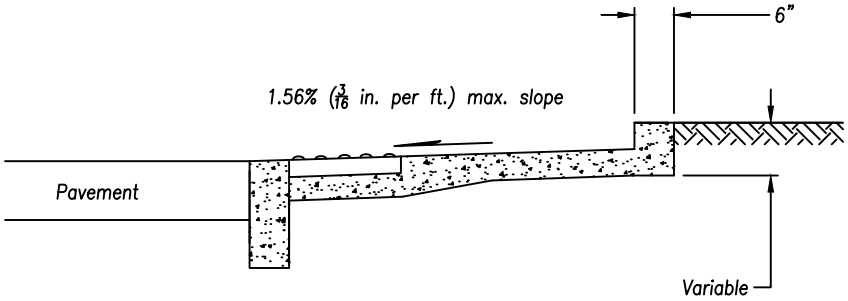

SECTION A–A

Notes:

1. For curb ramp design, see the following standards:
   - 1.1. ODOT Standard Construction Drawings BP 7.1 & 7.2
   - 1.2. 2009 American National Standards Institute (ANSI) 117.1
   - 1.3. Public Right of Way Accessibility Guidelines (PROWAG)

Attachment: 2020 Design, Construction, and Materials Specification Handbook (1575 : Design, Construction, and Materials Specification

FAIRFIELD OHIO

STANDARD CONSTRUCTION DRAWINGS

Item 452 Non-Reinforced Concrete Pavement Drive Apron

DATE: 05/04/2020	SCALE: NONE	FILE: 2020-008.DWG

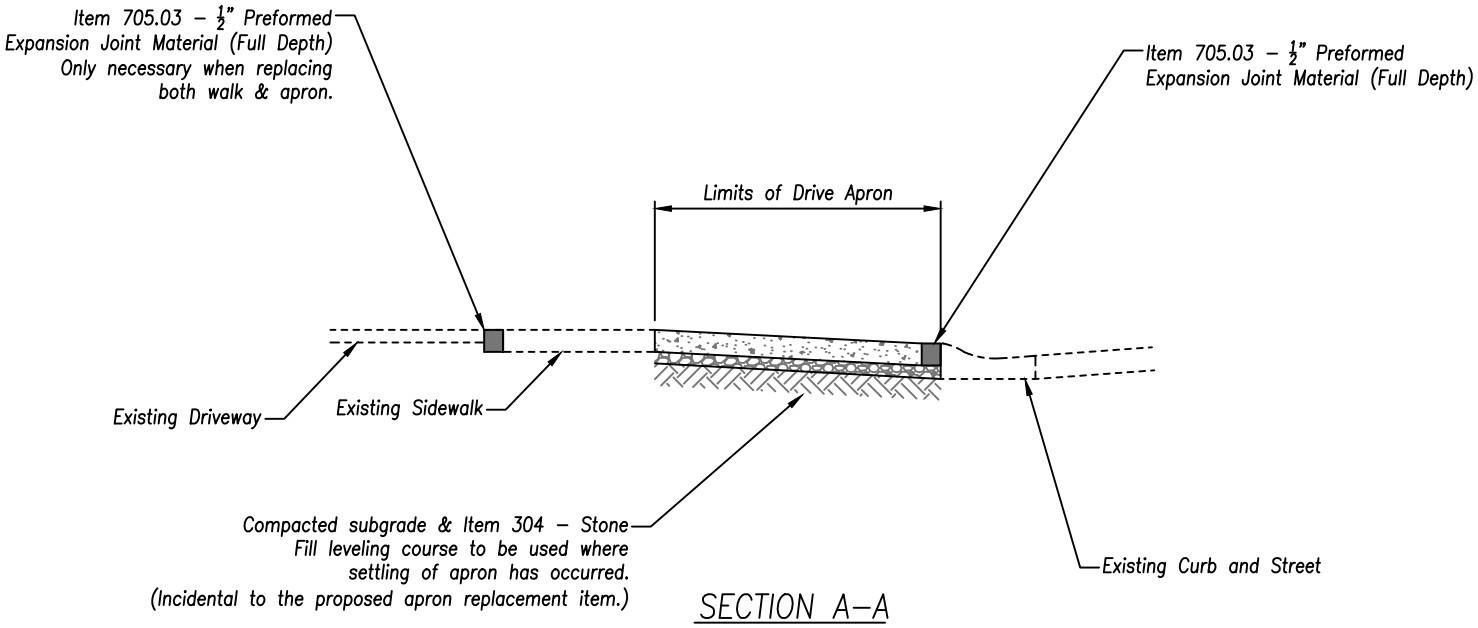

SECTION A–A

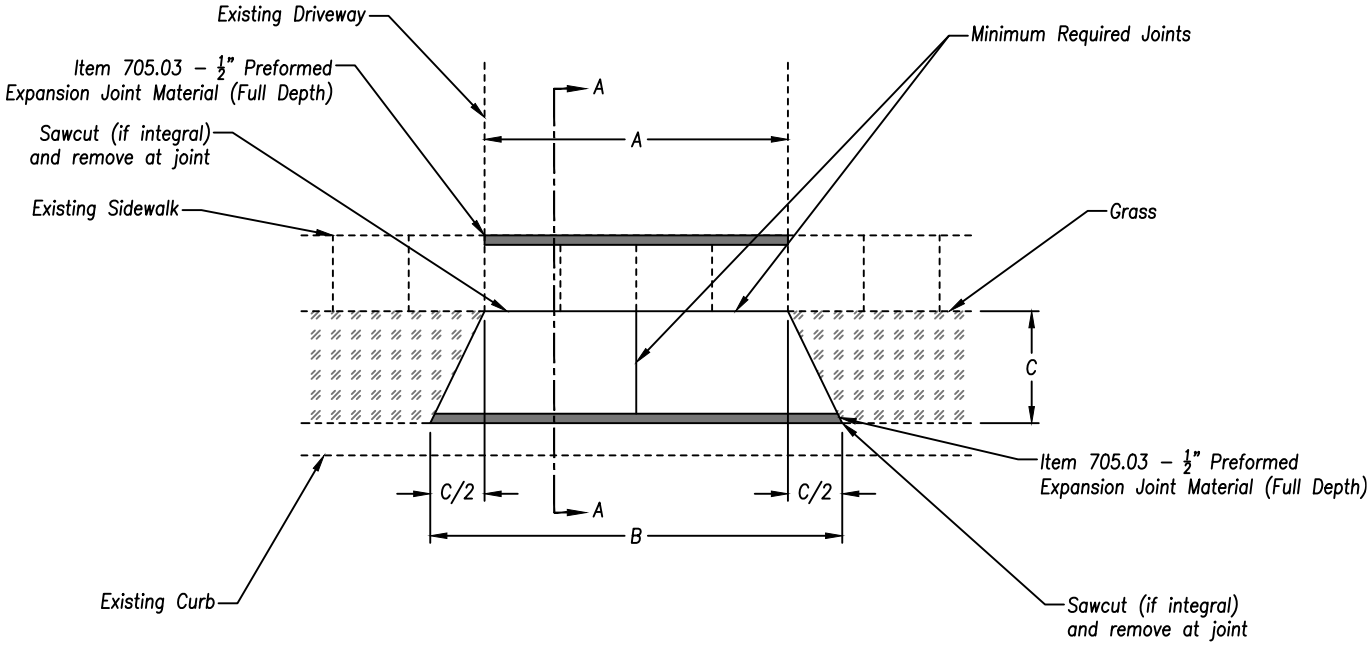

Notes:

1. The driveway shall be replaced in its existing size. No apron shall be wider at the back of curb than the sum of the driveway width at the face of sidewalk plus the width of the grass strip between the curb and the sidewalk (B = A + C).
2. Drive widths (A) are regulated by Section 300 of this manual.
3. All disturbed yard areas shall be restored to grade, seeded, and mulched before the work is approved for payment and shall be incidental to Item 452 – Non– Reinforced Concrete Pavement.
4. The finish applied to the concrete aprons shall be a light broom finish unless the resident requests a hand finish. All joints and outside edges may be tooled with an edger or joint tool after brooming or hand finishing to match adjacent concrete, as approved by the City.
5. The new apron shall meet the sidewalk and curb at existing elevations.
6. Concrete to be ODOT Class C. Minimum thickness are determined by use as follows:
   - 6.1. Residential Aprons: 7 inches
   - 6.2. Commercial Aprons: 9" inches

Attachment: 2020 Design, Construction, and Materials Specification Handbook (1575 : Design, Construction, and Materials Specification

FAIRFIELD OHIO

STANDARD CONSTRUCTION DRAWINGS

Item 608 Concrete Sidewalk

DATE: 05/04/2020	SCALE: NONE	FILE: 2020-009.DWG

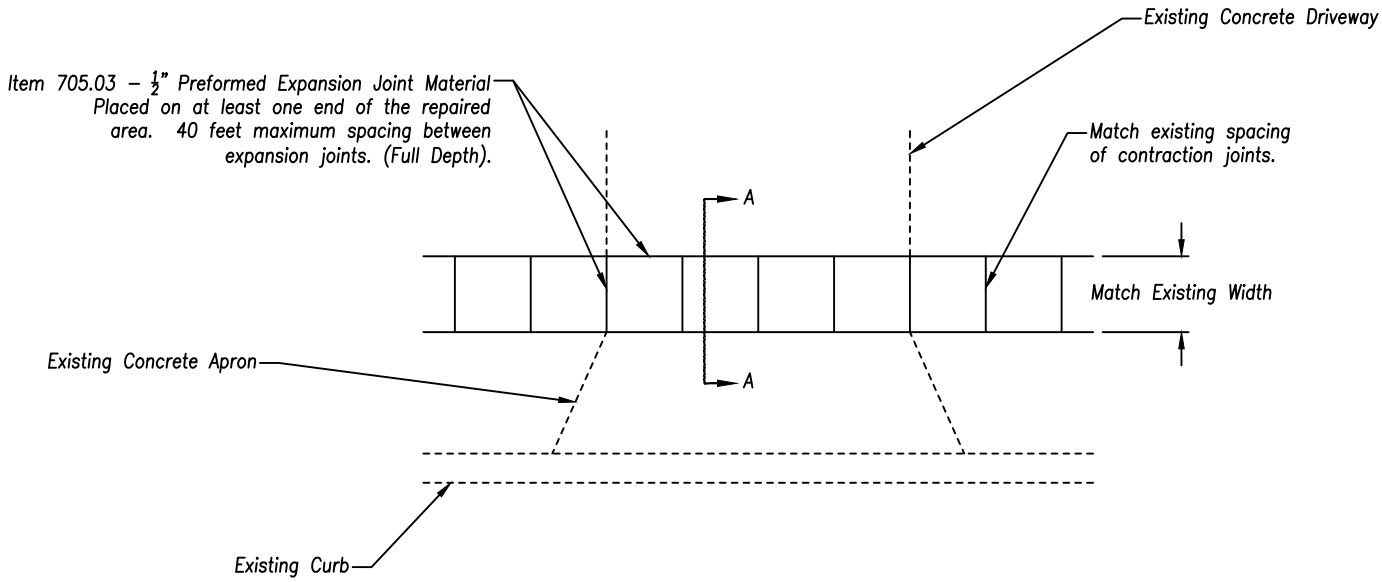

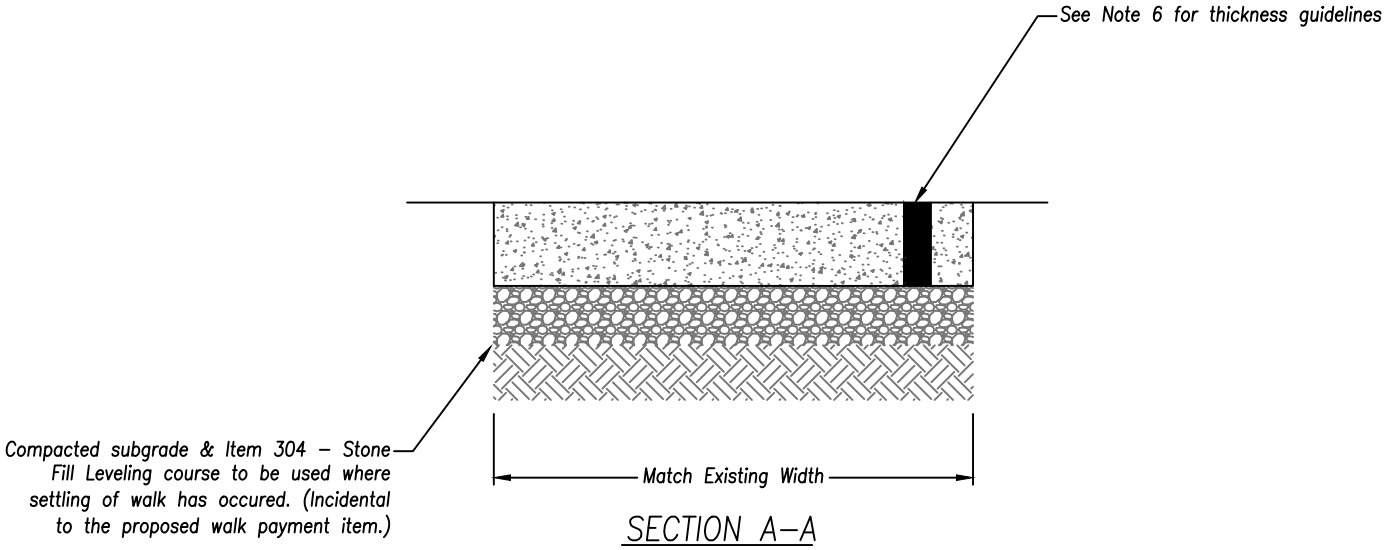

SECTION A–A

Notes:

1. The City shall mark in the field the walk to be replaced. Replacement walk shall match the line and grade of the existing walk and the joint pattern shall be maintained.
2. Item 705.03 – ½" Preformed Expansion Joint Material shall be placed on at least one end of the repaired area.
3. All repairs are to be made to the nearest joint.
4. The cost to repair any damage to adjacent walk or driveway by the contractor shall be incurred by the contractor.
4. The finish applied to the concrete walks shall be a light broom finish unless the resident requests a hand finish. All joints and outside edges may be tooled with an edger or joint tool after brooming or hand finishing to match adjacent concrete, as approved by the City.
6. Concrete to be ODOT Class C. Minimum thickness are determined by use as follows:
   - 6.1. Standard Walk: 4 inches, or match existing, whichever is greater.
   - 6.2. Walk through Residential Aprons: 7 inches
   - 6.3. Walk through Commercial Aprons: 9" inches
7. All disturbed yard areas shall be restored to grade, seeded, and mulched beofr ethe work is approved for payment and shall be incidental to Item 608 – Sidewalk, Remove and Replace.
8. Sidewalk in all new developments and redevelopments shall be 5 feet wide.

Attachment: 2020 Design, Construction, and Materials Specification Handbook (1575 : Design, Construction, and Materials Specification

Full Depth Asphalt Concrete Pavement

DATE: 05/04/2020 | SCALE: NONE | FILE: 2020-010.DWG

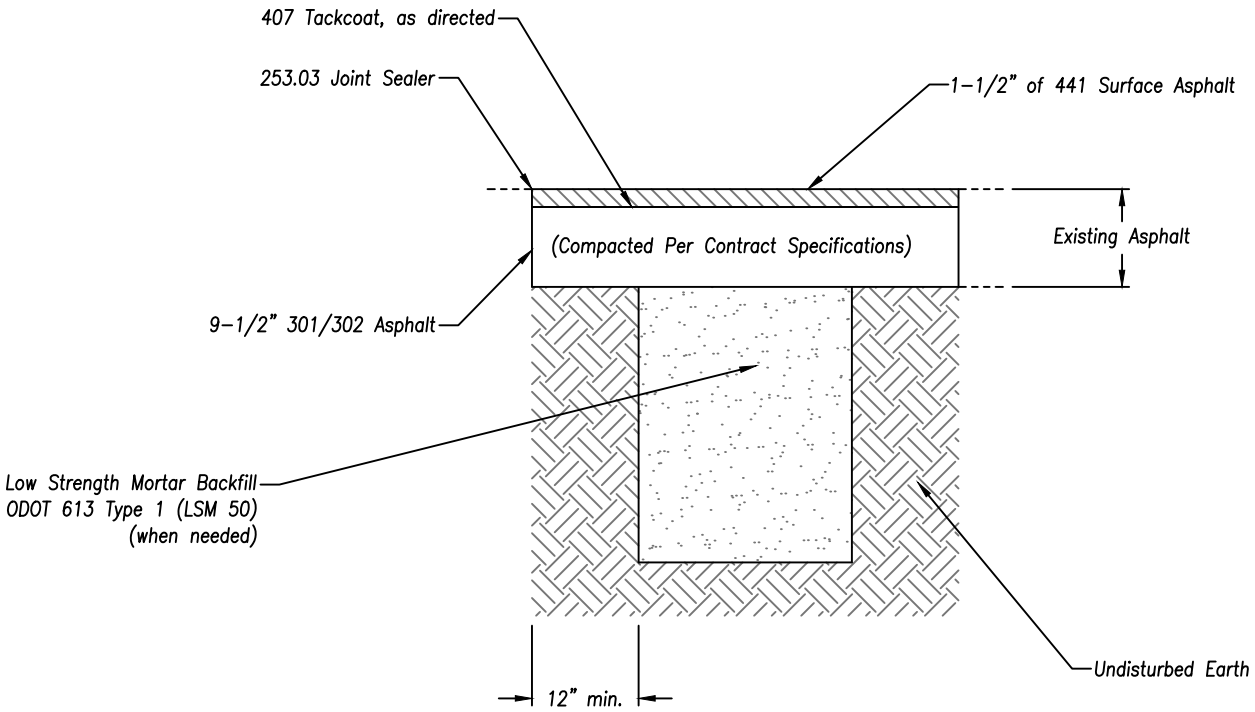

Type II – 11" Repair

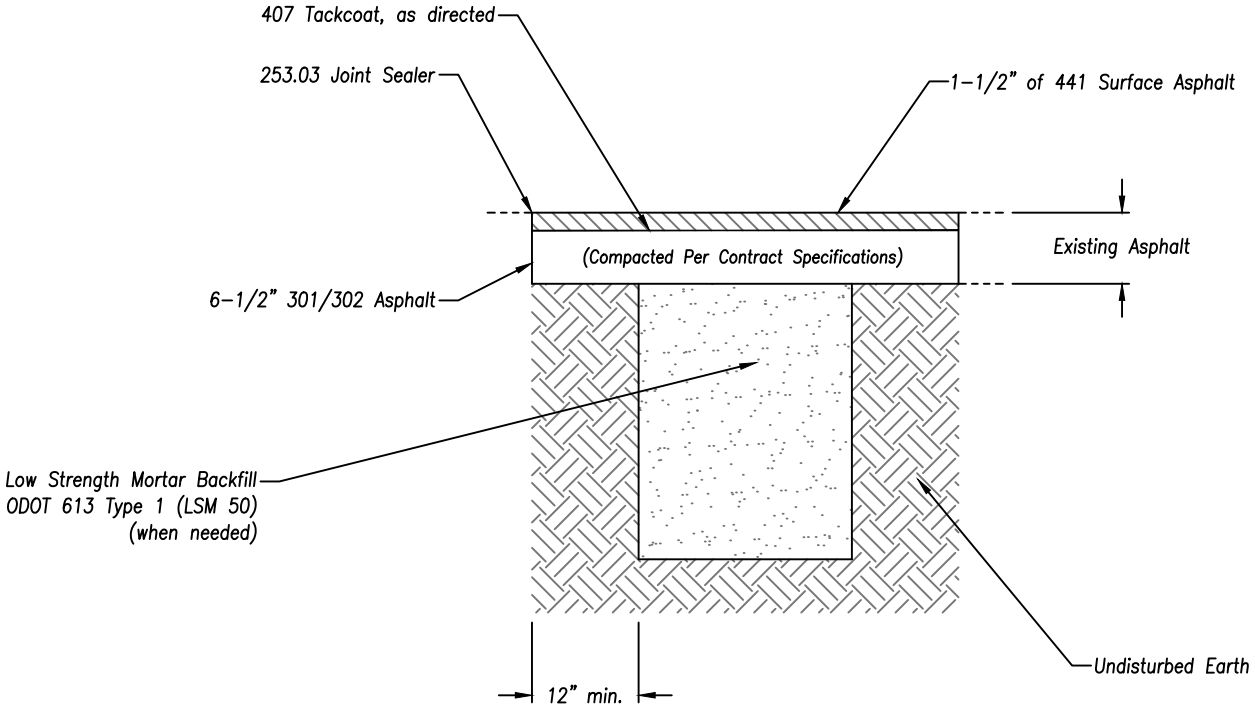

Type I – 8" Repair

Attachment: 2020 Design, Construction, and Materials Specification Handbook (1575 : Design, Construction, and Materials Specification

FAIRFIELD OHIO

STANDARD CONSTRUCTION DRAWINGS

Utility Service Location Designation

DATE: 05/04/2020 | SCALE: NONE | FILE: 2020-011.DWG

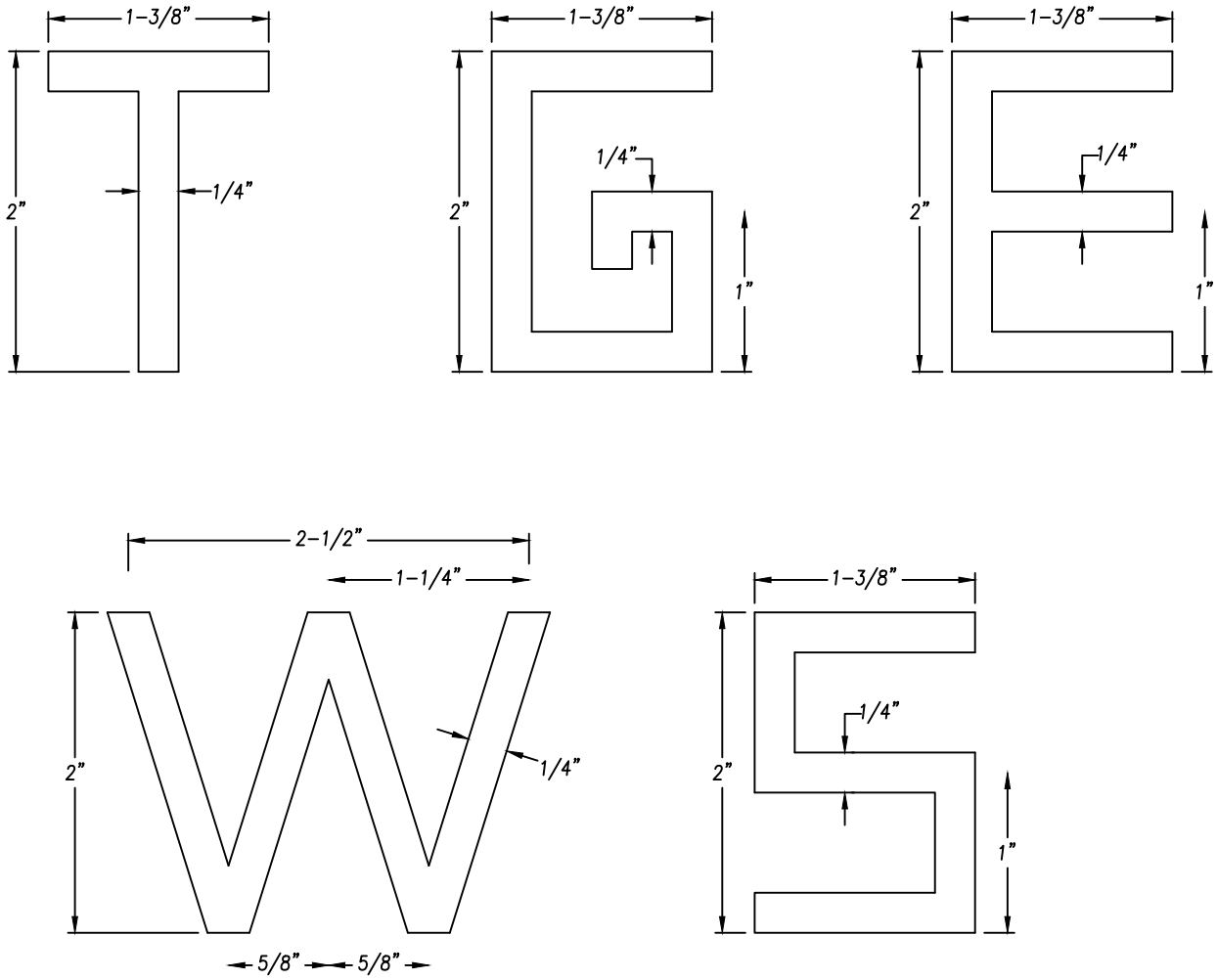

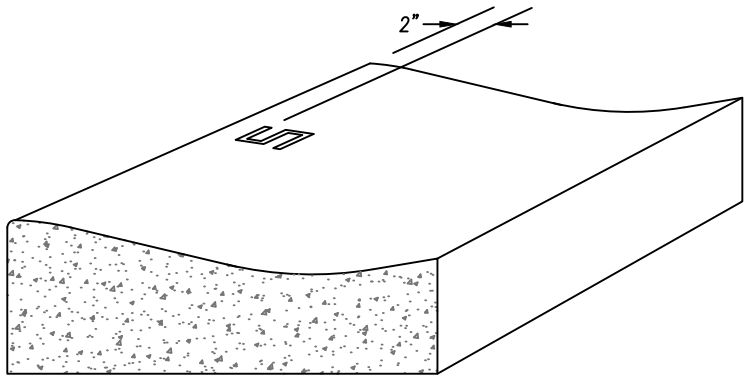

Notes:

1. Letters to be impressed directly into the fresh concrete a depth of 1/2" directly above the point where services come across the curb.

Attachment: 2020 Design, Construction, and Materials Specification Handbook (1575 : Design, Construction, and Materials Specification

FAIRFIELD OHIO

STANDARD CONSTRUCTION DRAWINGS

Backflow Preventer General Setting

DATE: 05/04/2020	SCALE: NONE	FILE: 2020-012.DWG

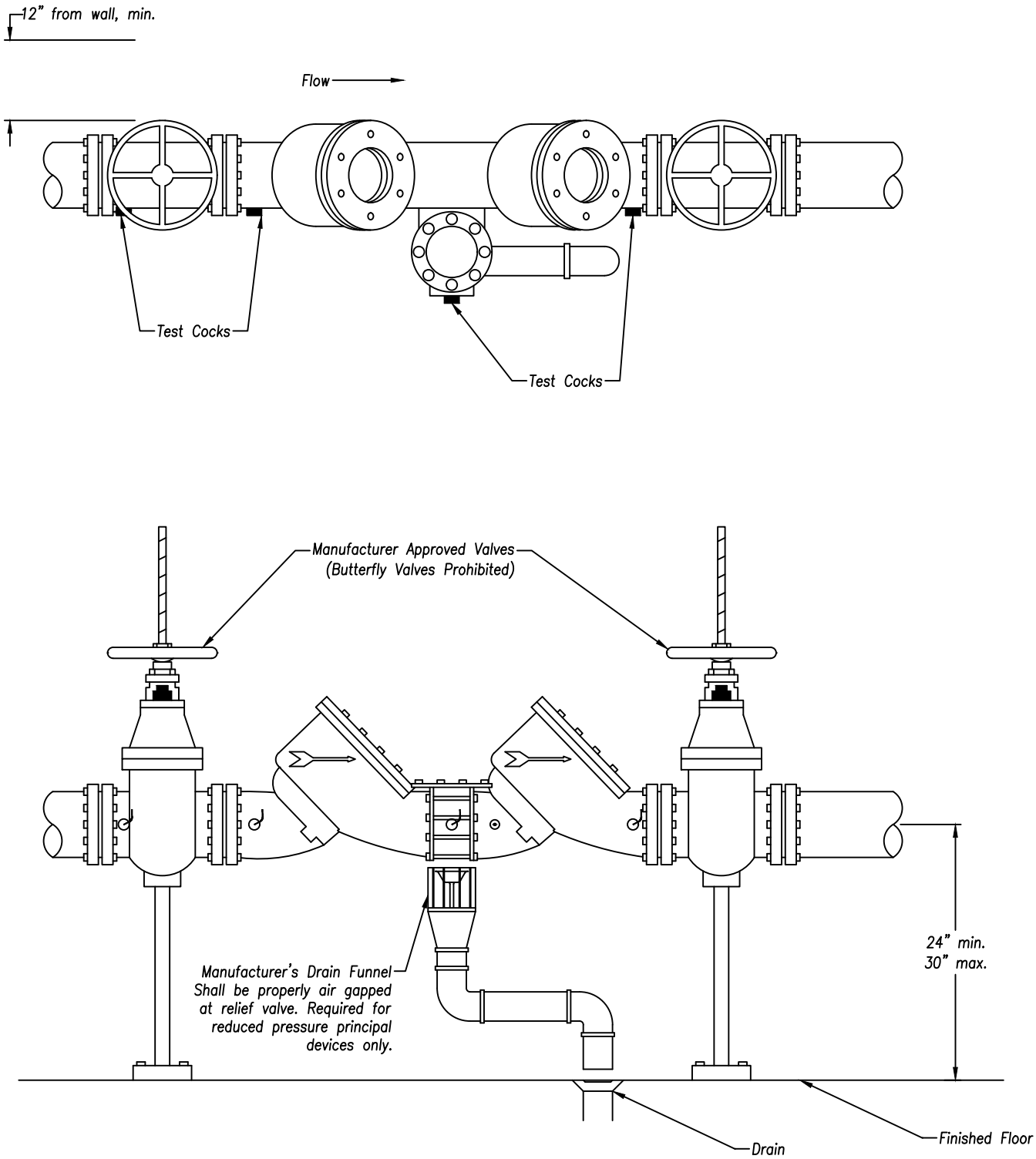

Notes:
1. Backflow preventer shall always be installed downstream of meter.
2. Connection(s) to water line between meter and backflow preventer are prohibited.
3. Assembly to be mounted inside building or heated enclosure.

Attachment: 2020 Design, Construction, and Materials Specification Handbook (1575 : Design, Construction, and Materials Specification

FAIRFIELD OHIO

STANDARD CONSTRUCTION DRAWINGS

Indoor Meter - Commercial Meter & BFP

DATE: 05/04/2020	SCALE: NONE	FILE: 2020-013.DWG

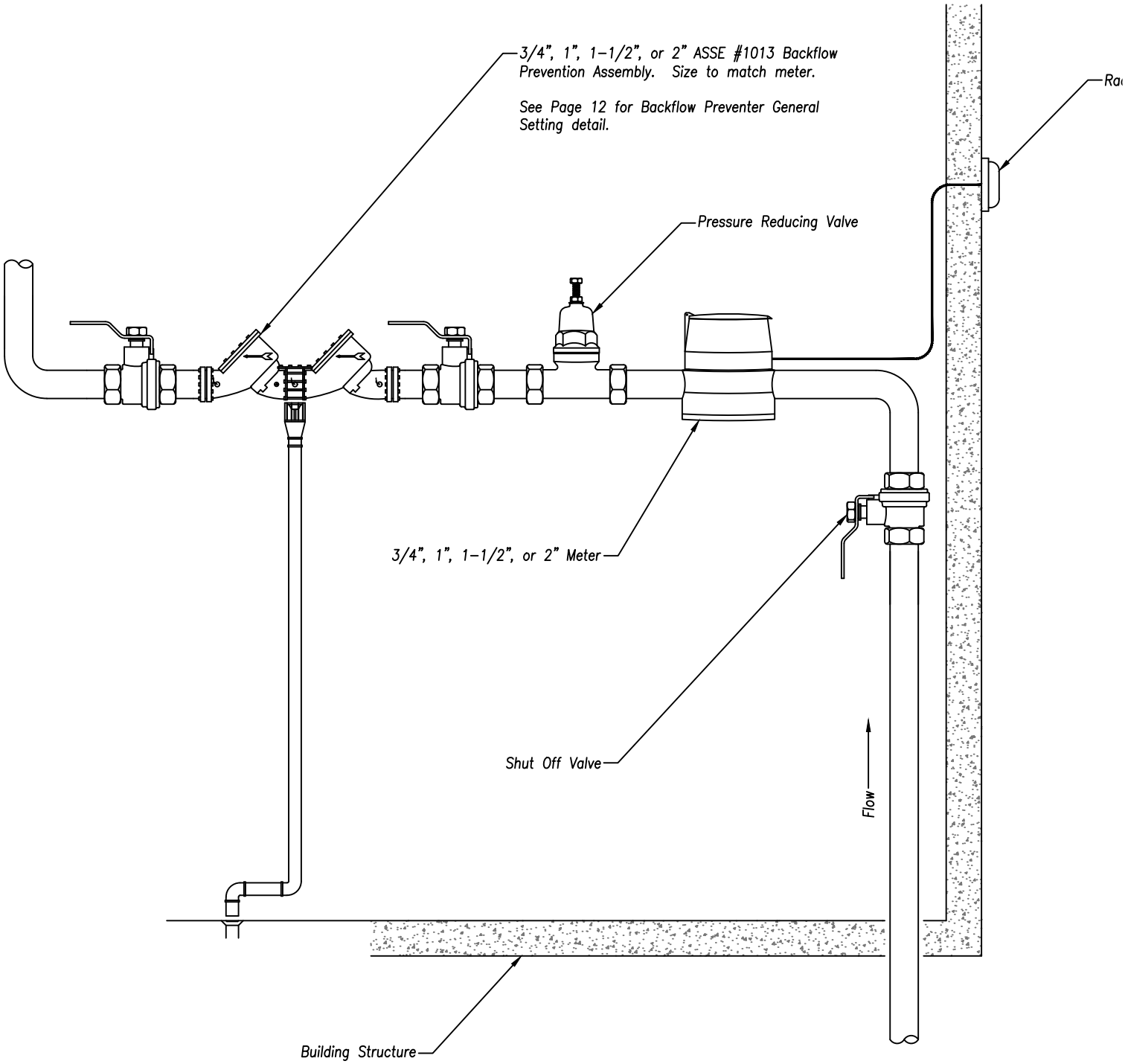

Notes:
1. See page 14 for commercial meters located outside of the building.
2. City of Fairfield Public Utilities-provided radio transmitter shall be installed outside of the building.

Attachment: 2020 Design, Construction, and Materials Specification Handbook (1575 : Design, Construction, and Materials Specification

FAIRFIELD OHIO

STANDARD CONSTRUCTION DRAWINGS

Outdoor Meter - Commercial Meter & BFP

DATE: 05/04/2020	SCALE: NONE	FILE: 2020-014.DWG

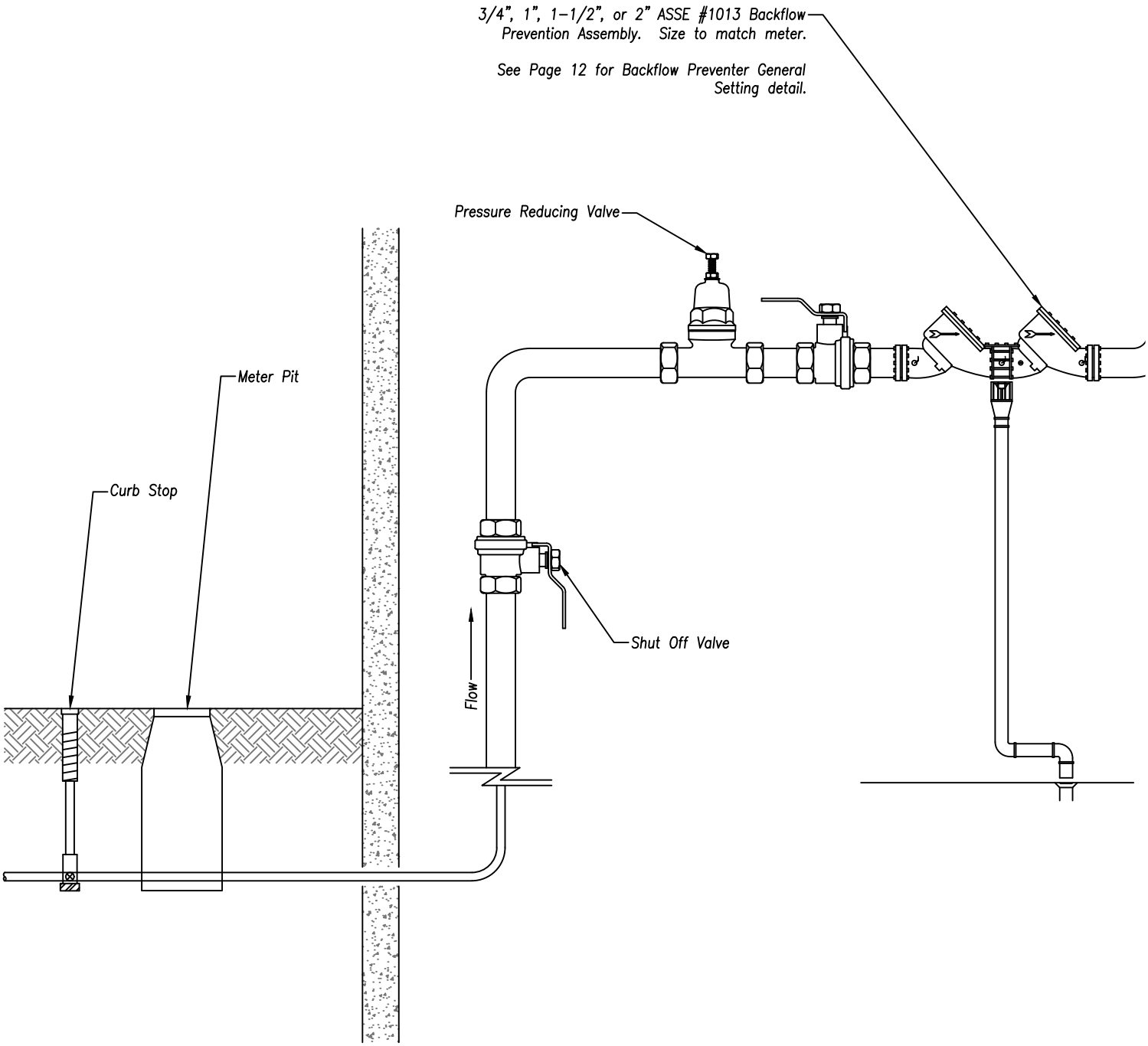

Notes:
1. See page 13 for commercial meters located inside of the building.

Attachment: 2020 Design, Construction, and Materials Specification Handbook (1575 : Design, Construction, and Materials Specification

FAIRFIELD OHIO

STANDARD CONSTRUCTION DRAWINGS

Water Service Installation

DATE: 05/04/2020	SCALE: NONE	FILE: 2020-015.DWG

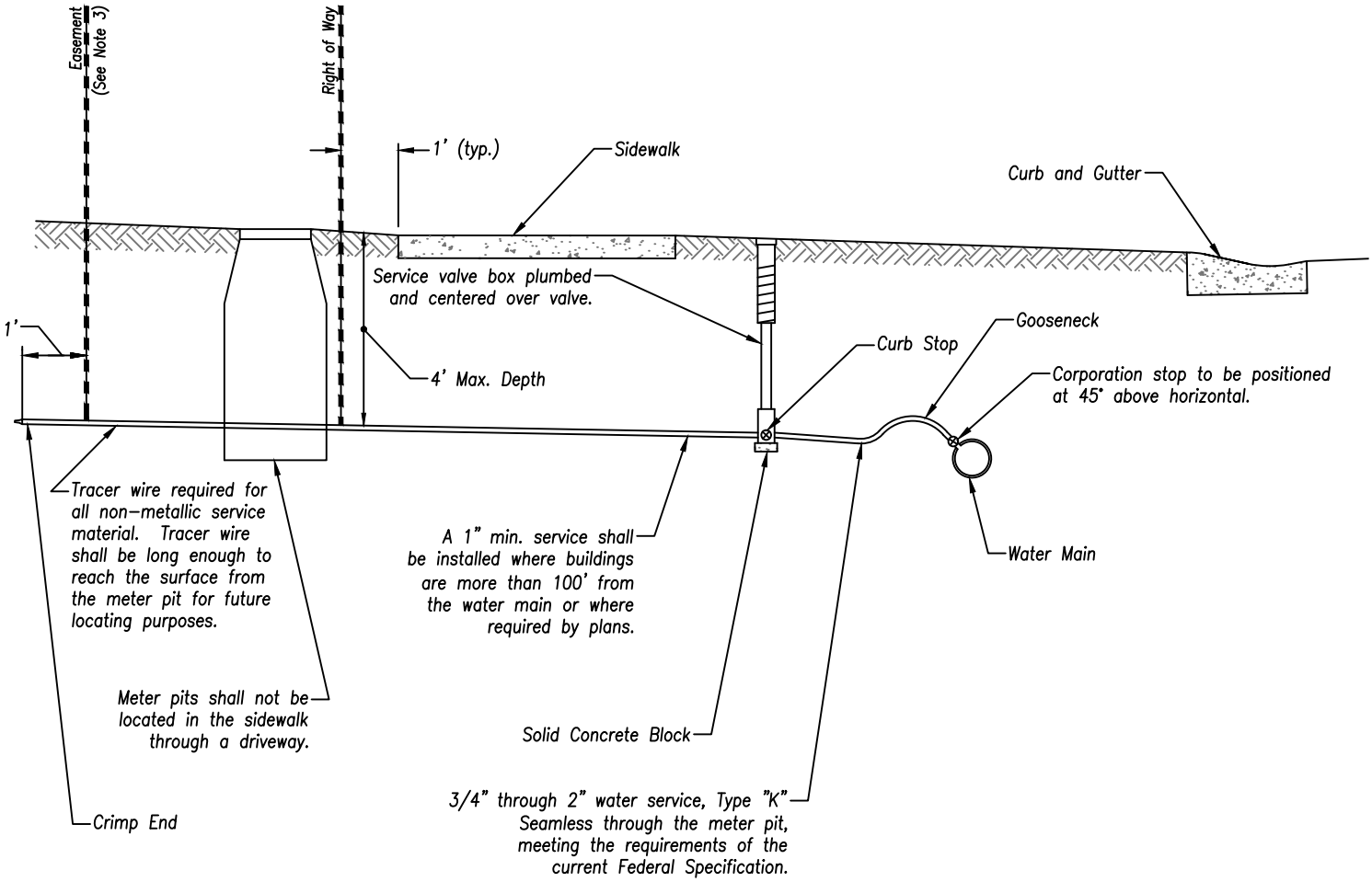

Notes:

1. Water service line shall not be buried in the same trench as other utilities. When the service parallels a sewer line, maintain as much separation as practical, 10' preferred.
2. Service box shall be plumbed & centered over curb stop.
3. If a utility easement exists behind the right-of-way line, the service line shall be extended to 1' behind the easement & the end crimped.
4. Water service shall be bedded with sand.

Attachment: 2020 Design, Construction, and Materials Specification Handbook (1575 : Design, Construction, and Materials Specification

FAIRFIELD OHIO

STANDARD CONSTRUCTION DRAWINGS

Residential Meter Pit

DATE: 05/04/2020	SCALE: NONE	FILE: 2020-016.DWG

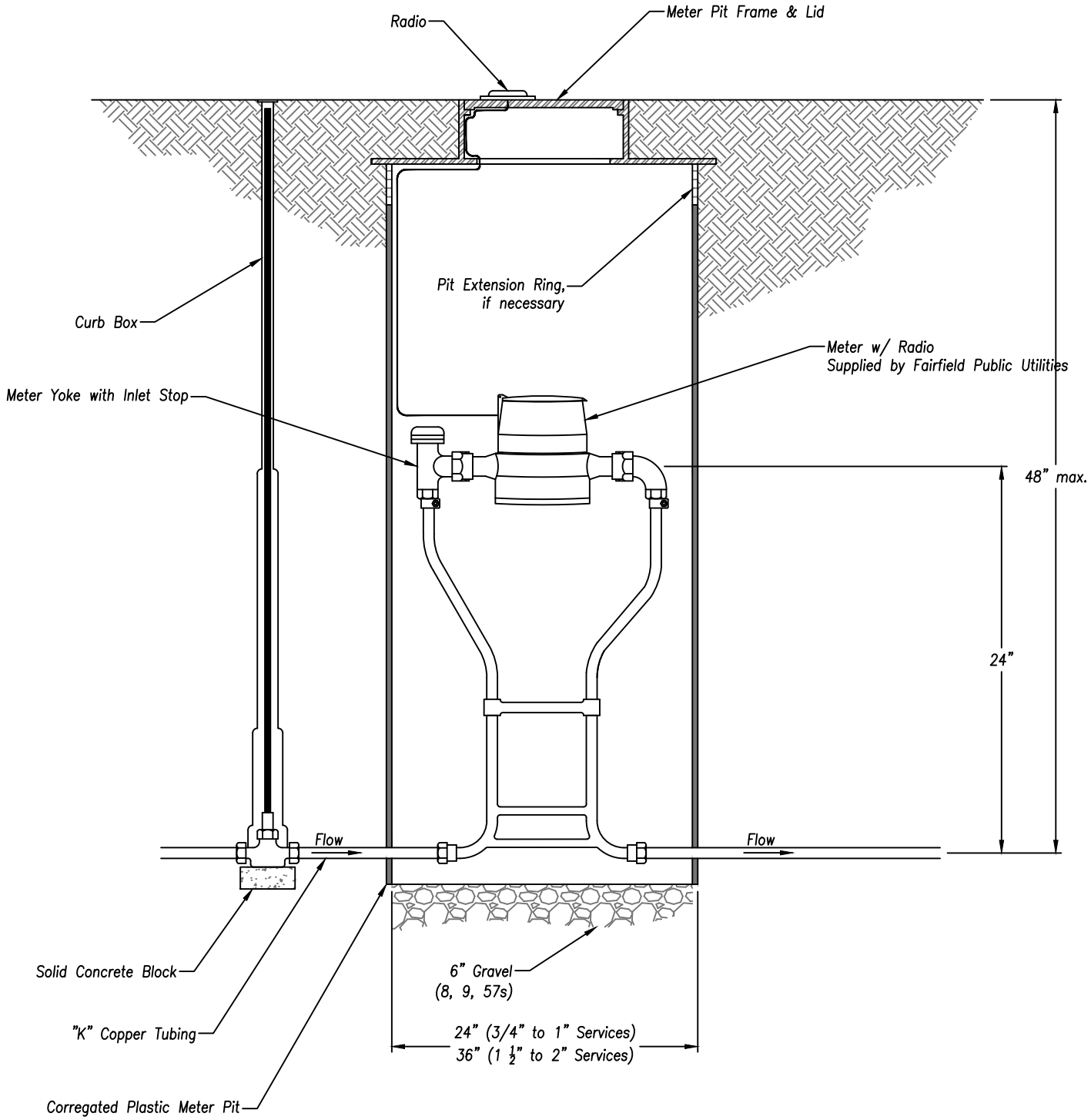

Attachment: 2020 Design, Construction, and Materials Specification Handbook (1575 : Design, Construction, and Materials Specification

FAIRFIELD OHIO

STANDARD CONSTRUCTION DRAWINGS

Fire Hydrant Installation (Page 1/2)

DATE: 05/04/2020	SCALE: NONE	FILE: 2020-017.DWG

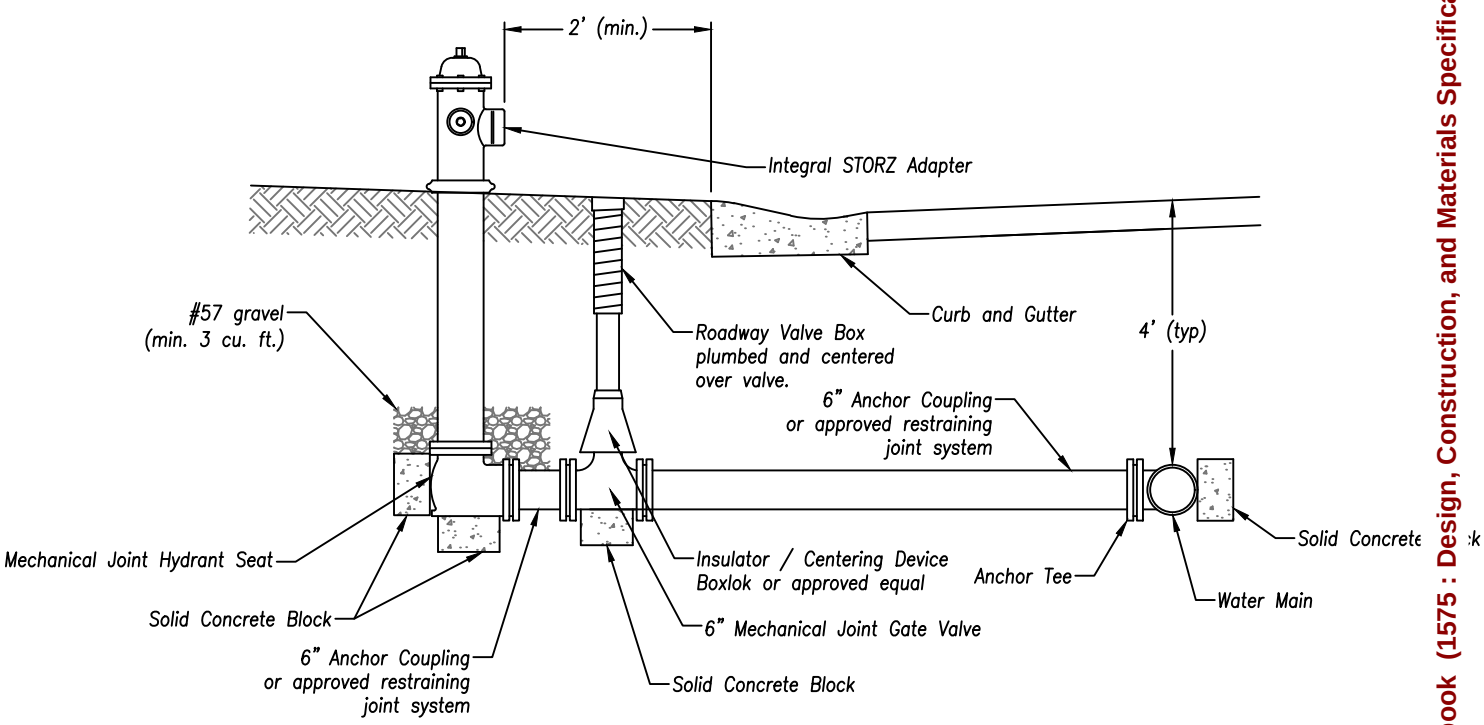

Water Main Under Street Pavement

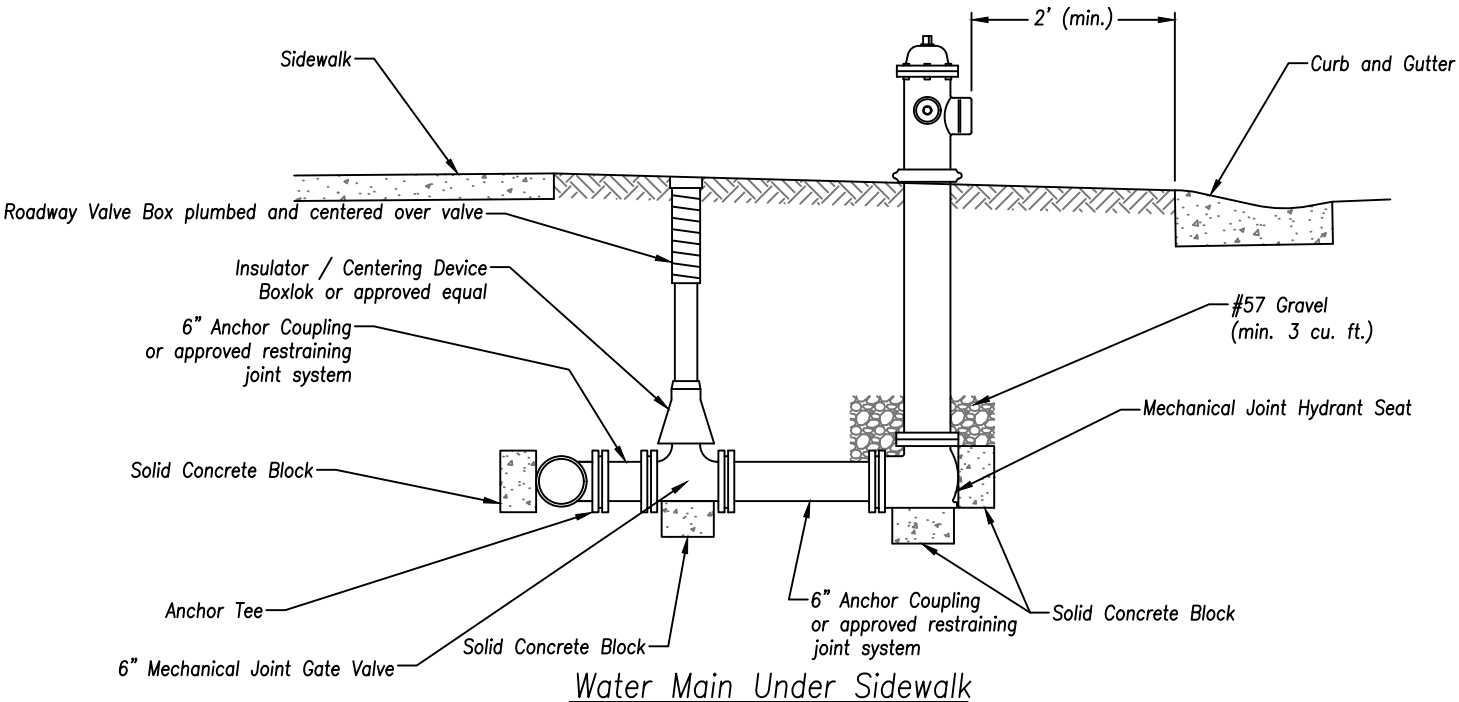

Water Main Under Sidewalk

Notes:
1. Fire hydrant shall be AWWA C502 and FM-1510 approved.
2. Polyethylene wrap all ductile iron joints and fittings, up to and including hydrant shoe flange.
3. All joints to be installed with an approved restraining joint system.

Attachment: 2020 Design, Construction, and Materials Specification Handbook (1575 : Design, Construction, and Materials Specification

FAIRFIELD OHIO

STANDARD CONSTRUCTION DRAWINGS

Fire Hydrant Installation (Page 2/2)

DATE: 05/04/2020	SCALE: NONE	FILE: 2020-018.DWG

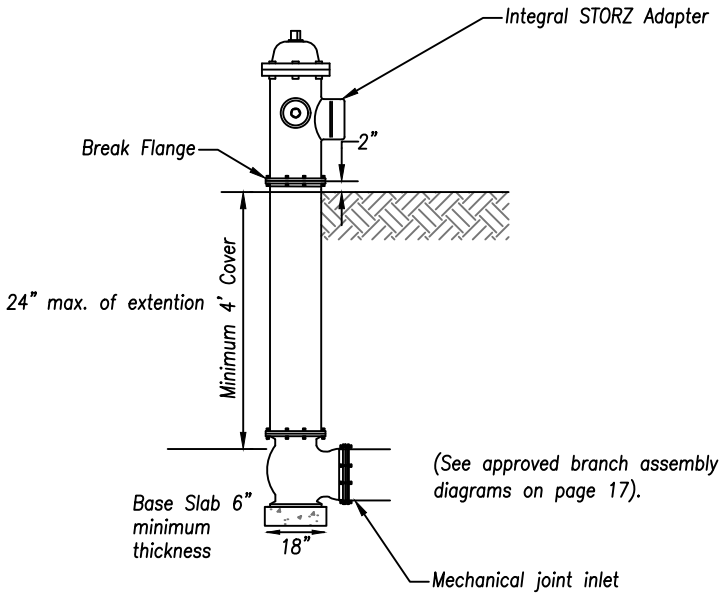

Fire Hydrant Profile View

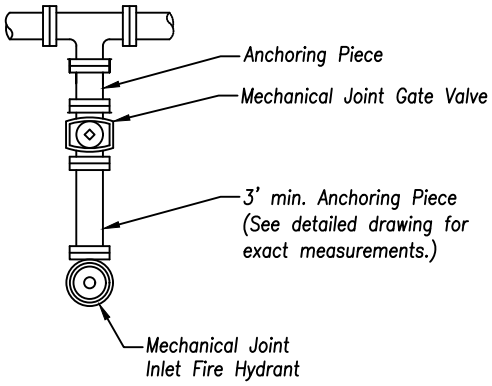

Type "A" Hydrant

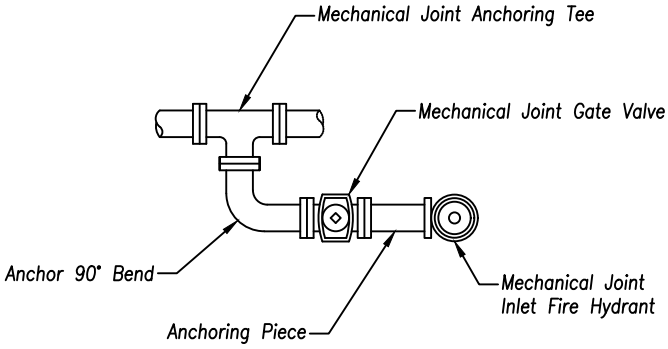

Type "B" Hydrant

Fire Hydrant Details

Dia. – Main Valve Opening	5-1/4 Inches W/ Bronze Seat
Dia. – Pumper Connection	5 Inches Storz Integral
Dia. – Hose Connection	2-1/2 Inches
Fairfield Thread Type	3.187 X 7
Shape – Caps & Operating Nut	Pentagon W/ Weathershield And One Piece Bronze Operating Nut
Dimensions – Operating Nut	1-1/2 Inches
Direction Of Closing	Right (clockwise)
Color To Be Painted (public)	Osha Safety Yellow
Color To Be Painted (private)	Osha Safety Red
Specific Model Or Models Required	Mueller A423, American Darling B-84-b, O Kennedy K-81-a

1. All main line pipe and fittings shall consist of Class 53 ductile iron pipe and fittin C151 and C153 with polyethylene wrap for hydrant branch, barrel, and fittings.
2. Private hydrants connected directly to a public main shall meet public standards.

Notes:

1. In non-curbed areas, the distance from the centerline of the water main to the centerline of the fire hydrant shall be shown in the fire hydrant notes on the detailed drawings.
2. Excavation around fire hydrant shall be backfilled completely with ¾" gravel course, free of sand, to within 1' of the finished surface of the ground.

Attachment: 2020 Design, Construction, and Materials Specification Handbook (1575 : Design, Construction, and Materials Specification

Casing Pipes

DATE: 05/04/2020 | SCALE: NONE | FILE: 2020-019.DWG

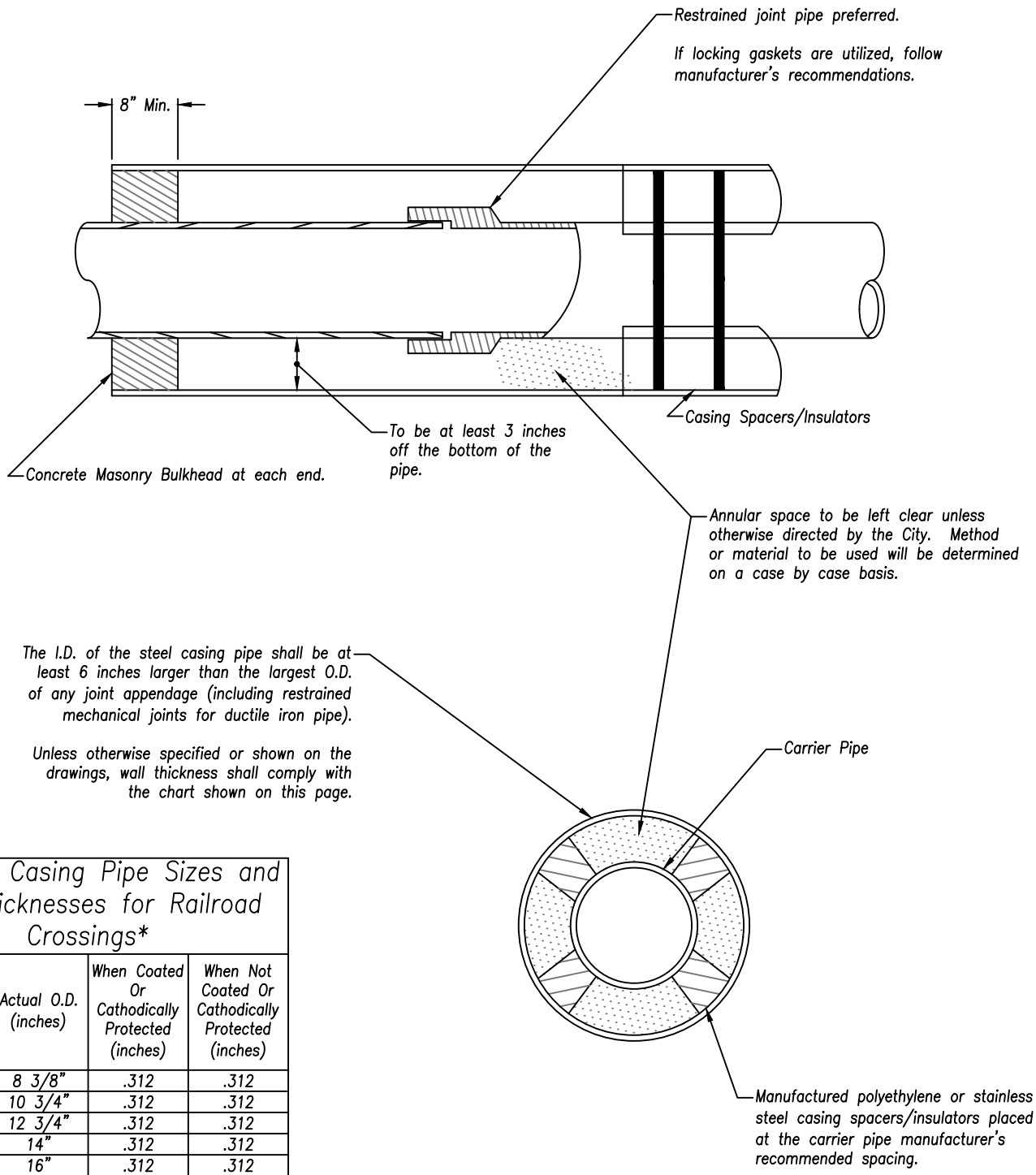

Required Casing Pipe Sizes and Wall Thicknesses for Railroad Crossings*

Nominal Diameter (inches)	Actual O.D. (inches)	When Coated Or Cathodically Protected (inches)	When Not Coated Or Cathodically Protected (inches)
8"	8 3/8"	.312	.312
10"	10 3/4"	.312	.312
12"	12 3/4"	.312	.312
14"	14"	.312	.312
16"	16"	.312	.312
18"	18"	.312	.312
20" & 22"	20" & 22"	.312	.344
24"	24"	.312	.375

*Based on E80 loadings with a minimum cover of 4'-6".

Steel casing pipe shall have a steel yield strength of 35,000 PSI and meet ASTM A139 Grade B requirements.

No hydrotest required.

Chart based on recommendations of the American Railway Engineering Association.

Attachment: 2020 Design, Construction, and Materials Specification Handbook (1575 : Design, Construction, and Materials Specification

Restrained Joint Lengths

DATE: 05/04/2020 | SCALE: NONE | FILE: 2020-020.DWG

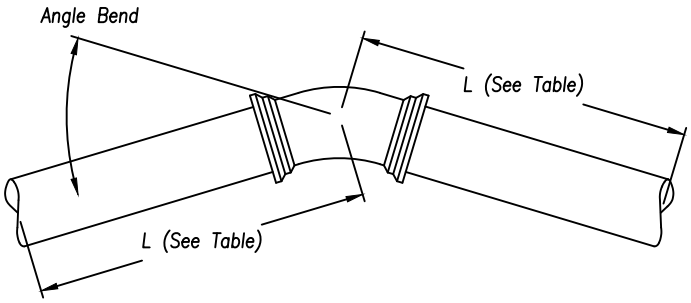

Required Restraint Lengths, L								
		Diameter of Watermain						
		6"	8"	10"	12"	14"	16"	Larger Than 16"
Angle Bend	11-1/4°	6'	8'	9'	11'	13'	14'	By Design
	22-1/2°	11'	15'	18'	22'	25'	28'	
	45°	23'	31'	37'	44'	51'	58'	
	Tee, 90°	28'	37'	47'	66'	77'	90'	

Notes:
1. Fitting must be restrained in all cases.
2. Restraining joint systems are acceptable when designed in accordance with "Thrust Restraint Design for Ductile Iron Pipe", published by the Ductile Iron Pipe Research Association (DIPRA). Restraining glands, manufactured of ductile iron conforming to ASTM A536-84 specifications, or locking gaskets such as Field Lok, or equal, may be used.

Attachment: 2020 Design, Construction, and Materials Specification Handbook (1575 : Design, Construction, and Materials Specification

FAIRFIELD OHIO

STANDARD CONSTRUCTION DRAWINGS

Thrust Blocking

DATE: 06/01/2020 | SCALE: NONE | FILE: 2020-021.DWG

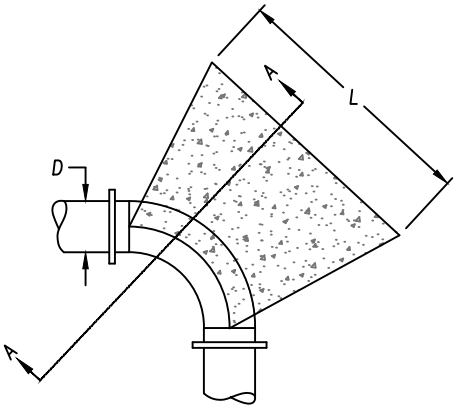

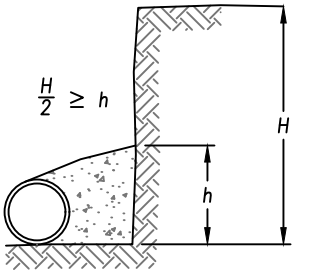

SECTION A–A

Thrust Block at Elbow

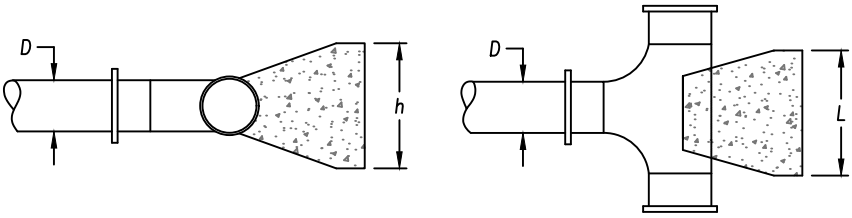

Thrust Block at Tees

Notes:

1. Bearing depth (h) shall be determined from bearing area required (see table). Bearing length (L) will be 1' minimum.
2. The surface of the bearing area shall be smooth undisturbed earth.
3. ODOT Class C Concrete shall be used for all blocking.
4. Height of blocking to be less than or equal to 1/2 of the depth of the trench. See Section A–A.
5. Concrete anchor blocking will be permitted for work on existing mains. New watermain installation must be restrained by restraining joint systems or locking gaskets such as FieldLok, or equal, provided that sufficient length for mechanical restraint is available.

Minimum Bearing Area Required, h x L (sq. ft.)

	Horizontal Bends				
Dia., D	11 1/4°	22 1/2°	45°	90°	Tee or Dead E
4"	1	1	1	2	2
6"	1	2	3	4	3
8"	1	2	4	7	5
10"	2	3	6	11	8
12"	2	4	8	15	11
16"	4	7	14	26	18

Areas tabulated are for single fittings and bearing pressure of 2000 lb/sf. When more than one fitting is used, the bearing area should be increased

Attachment: 2020 Design, Construction, and Materials Specification Handbook (1575 : Design, Construction, and Materials Specification

FAIRFIELD OHIO

STANDARD CONSTRUCTION DRAWINGS

Interior Fire Line Double Check Detector Assembly

DATE: 05/04/2020 | SCALE: NONE | FILE: 2020-022.DWG

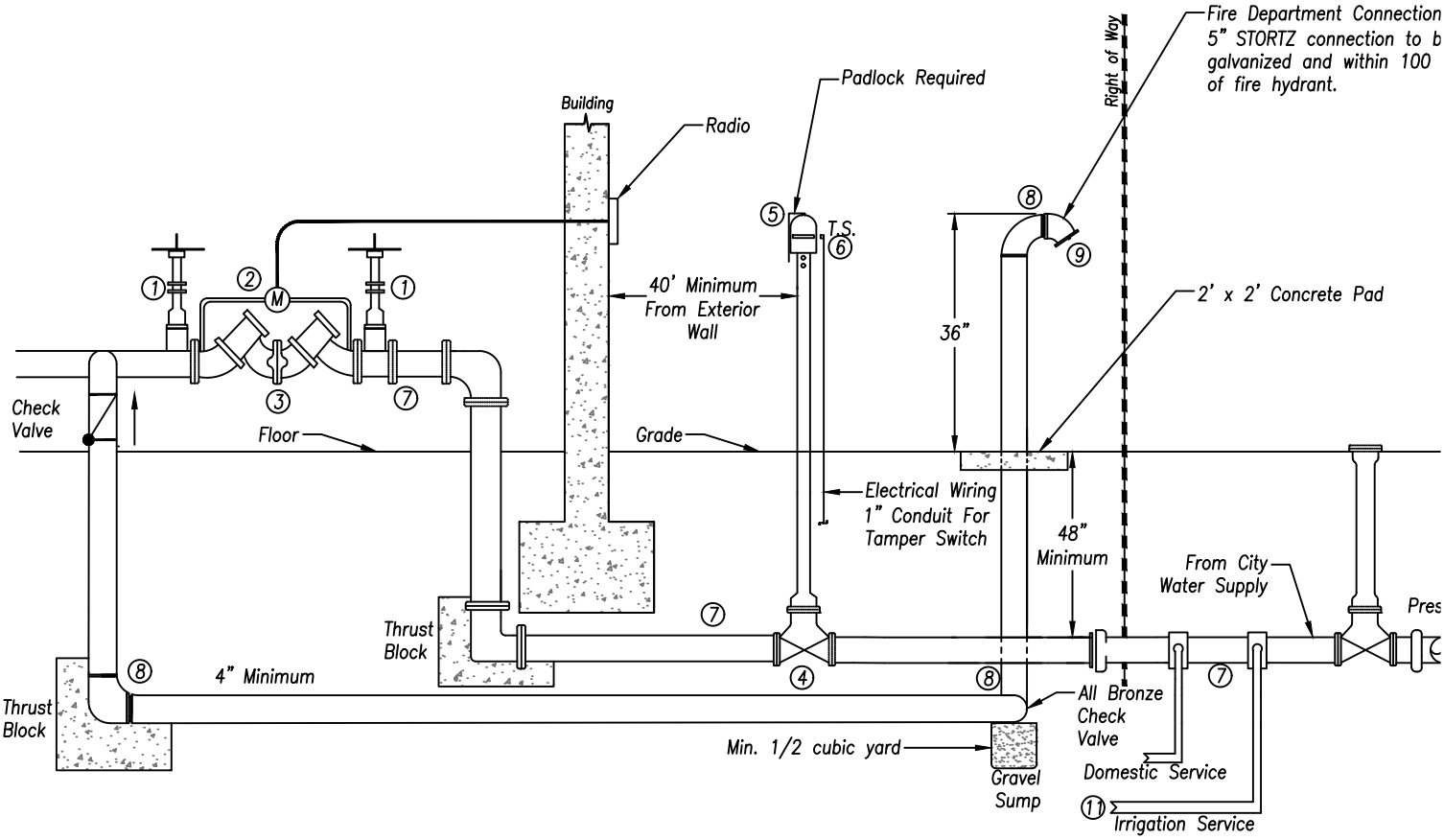

Valve Legend:

1. Valve, O.S.&Y.
2. Bypass Line w/ Meter, Radio, and Double Check Backflow Preventer
3. Reduced Pressure Double Check Detector Assembly (meets or exceeds ASSE 1047, AWWA C511-92)
4. Flanged NRS Resilient Wedge Indicator Post Gate Valve (meets or exceeds AWWA C509 and C515)
5. Post Indicator Valve
6. Potter Tamper Switch M PCVS-2, Two Sets of Contacts, 120V
7. Class 53 Ductile Iron Piping and Fittings From Main to Detector Check
8. 4" Galvanized 90° Elbow
9. 4"x5" STORTZ Connection with 30° Turndown and Blind Flange
10. Pressure Tap meeting City of Fairfield Specifications
11. Valved and Metered Domestic / Irrigation Service with Curb Box. Backflow preventers required for domestic and irrigation lines.

M Water Meter

Attachment: 2020 Design, Construction, and Materials Specification Handbook (1575 : Design, Construction, and Materials Specification

FAIRFIELD OHIO

STANDARD CONSTRUCTION DRAWINGS

Fire Line Meter Vault with Double Check Detector Assembly

DATE: 05/04/2020 | SCALE: NONE | FILE: 2020-023.DWG

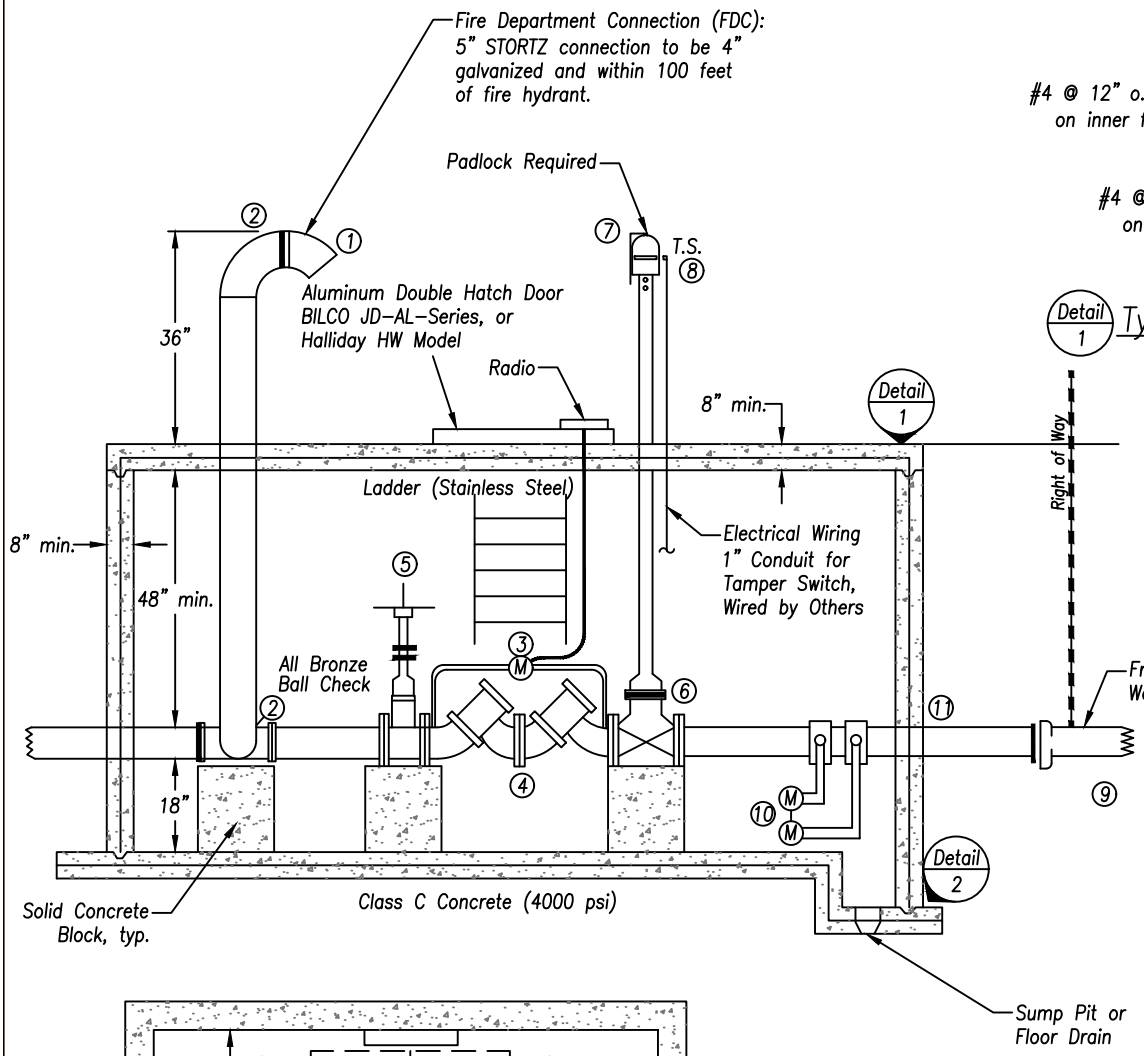

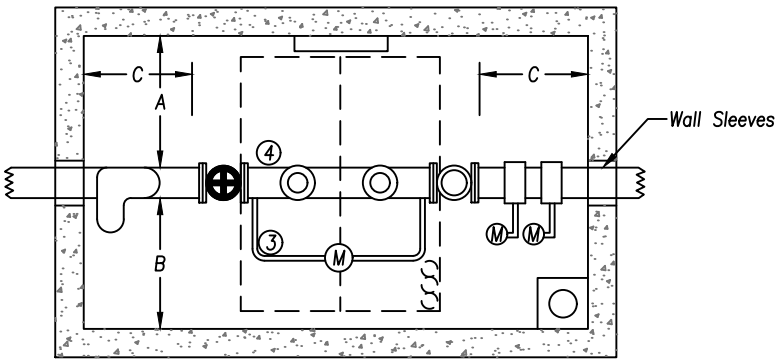

Precast pit to be approved by Director of Public Utilities

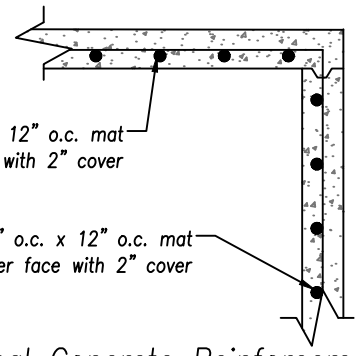

Detail 1 Typical Concrete Reinforcem

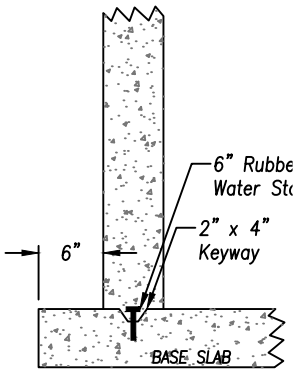

Detail 2 Typical Water Stop

Valve Legend:

1. 4" X 5" STORTZ Connection with 30° Turndown and Blind Flange
2. 4" Galvanized 90° Elbow
3. Bypass Line with Meter, Radio, and Double Check Backflow Preventer
4. Double Check Detector Assembly (meets or exceeds ASSE 1048 AWWA C510-97)
5. Valve, O.S.&Y.
6. Flanged Resilient Wedge Indicator Post Gate Valve (meets or exceeds AWWA C509 and C515)
7. Indicator Post
8. Potter Tamper Switch M PCVS-2, Two Sets of Contacts, 120V
9. Pressure Tap to City of Fairfield Specifications
10. Valved and Metered Domestic / Irrigation Services
11. Class 53 Ductile Iron Pipe and Fittings (meets or exceeds AWWA C151 AND C153). Domestic and Irrigation Backflow Preventers are Required.

M Water Meter

Minimum Clearances for Detecto Check Installation

Meter Size	A	B	C	Door S
4" X 1"	41-1/2"	41-1/4"	25"	48" X
6" X 1"	45"	45"	28"	48" X
8" X 1"	48-3/4"	49-1/4"	30"	48" X
10" X 1"	54"	50"	34"	48" X
10" X 12" X 1"	58"	50"	36"	48" X

Clearances for Fire Pit Meter

Meter Size	A	B	C	Door S
2"	37"	28"	21"	36" X
3"	38"	29"	23"	36" X
4"	39"	30"	25"	36" X
5"	43"	30"	28"	60" X 60"
6"	36"	36"	30"	60" X 60"

Attachment: 2020 Design, Construction, and Materials Specification Handbook (1575 : Design, Construction, and Materials Specification

FAIRFIELD OHIO

STANDARD CONSTRUCTION DRAWINGS

Service Line Details

DATE: 05/04/2020	SCALE: NONE	FILE: 2020-024.DWG

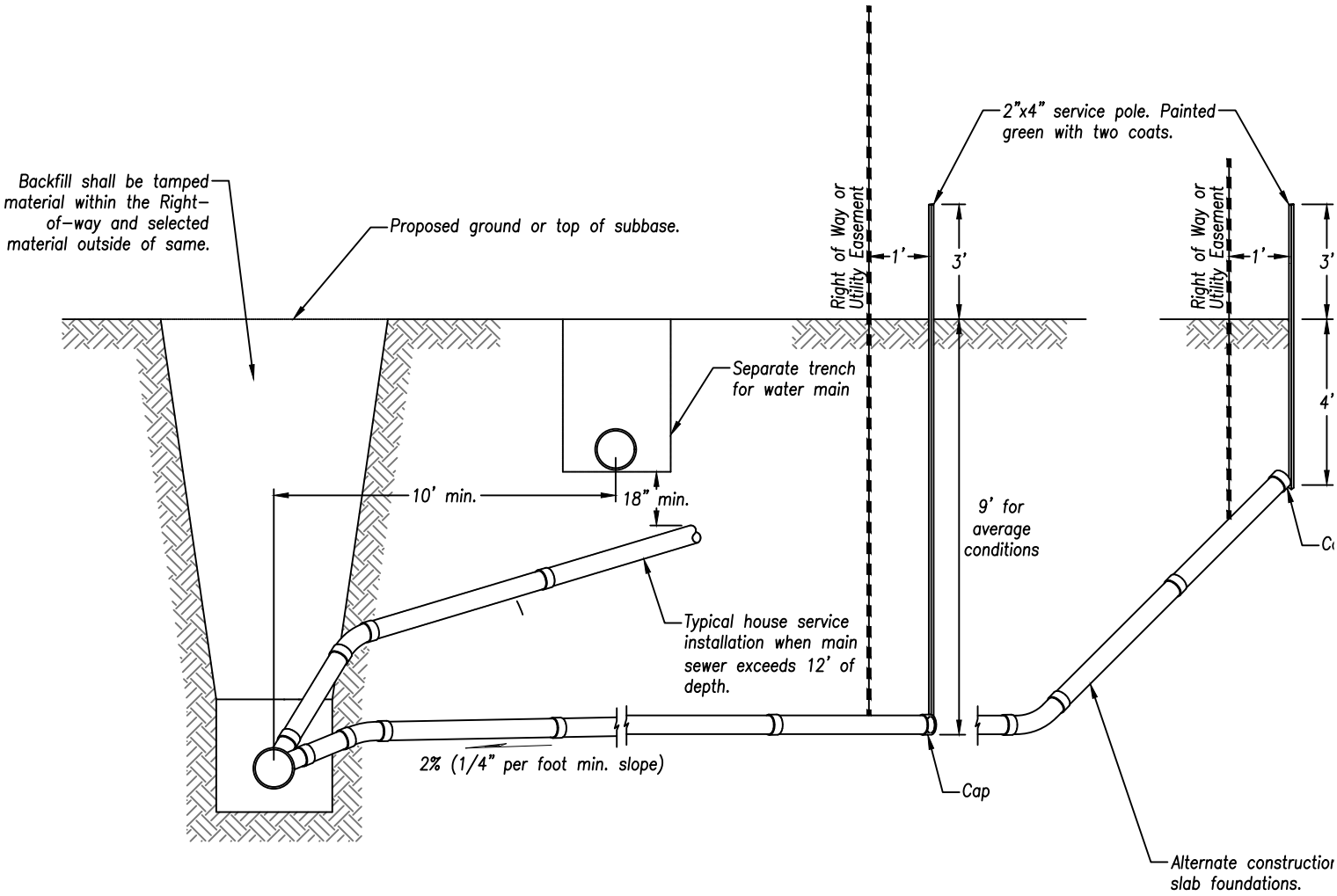

Notes:

1. Service line minimum depth of cover will be 36". Written permission will be required for coverage of less than 36".
2. Service line to be perpendicular to main sewer unless approved otherwise.
3. Services shall be located at points approved by the City. At each capped service line there shall be placed a service pole painted green. No services will be accepted unless they are reported by the contractor.
4. Service shall be constructed at 2% (1/4" per foot) minimum slope.
5. If a utility easement exists behind the Right-of-Way line, the service line shall be constructed across the easement. Otherwise, it shall be constructed to 1 foot behind the Right-of-Way line.
6. All excavation, sheeting, shoring, and bracing shall comply with all applicable OSHA standards.
7. Provide 3' of separation between lowest level served by gravity and crown of main sewer line at connection.

Attachment: 2020 Design, Construction, and Materials Specification Handbook (1575 : Design, Construction, and Materials Specification

FAIRFIELD OHIO

STANDARD CONSTRUCTION DRAWINGS

Force Main HDPE Lateral Assembly with Stainless Steel Curb Stop (1-1/4" & 1-1/2")

DATE: 05/04/2020	SCALE: NONE	FILE: 2020-025.DWG

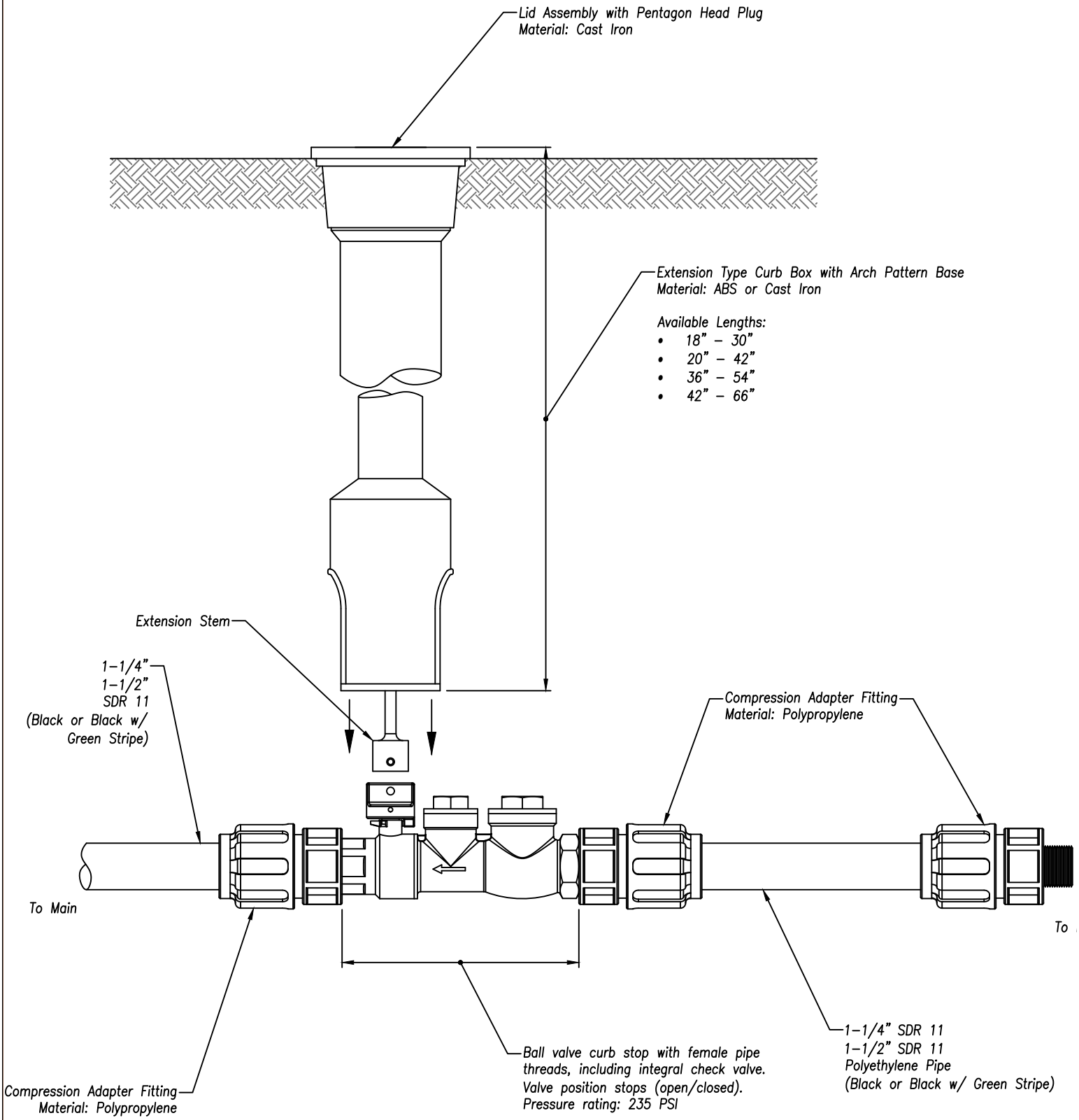

Notes:
1. To assemble, apply a double layer of teflon tape and a layer of pipe dope to the threads on the plastic fittings and install per the manufacturer's instructions.
2. Assembly to be pressure tested.
3. Assembly is to be used with SDR11 HDPE pipe.

Attachment: 2020 Design, Construction, and Materials Specification Handbook (1575 : Design, Construction, and Materials Specification

FAIRFIELD OHIO

STANDARD CONSTRUCTION DRAWINGS

Force Main PVC Lateral Assembly with Stainless Steel Curb Stop (1-1/4" & 1-1/2")

DATE: 05/04/2020	SCALE: NONE	FILE: 2020-026.DWG

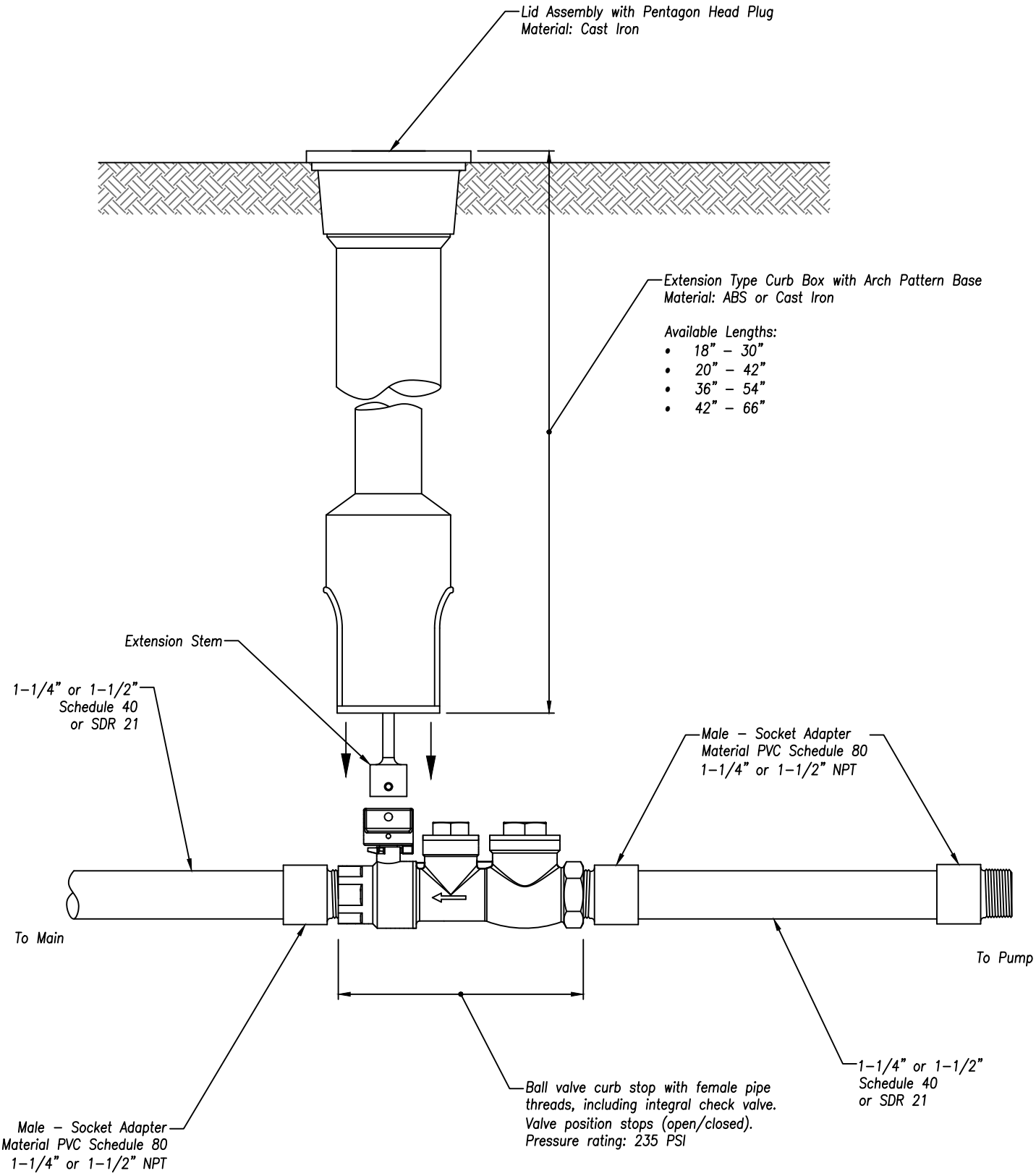

Notes:
1. To assemble, apply a double layer of teflon tape and a layer of pipe dope to the threads on the plastic fittings and install per the manufacturer's instructions.
2. Assembly to be pressure tested.
3. Assembly is to be used with PVC pipe. PVC shall be Schedule 40 or SDR-21 w/ Schedule 80 fittings.

Attachment: 2020 Design, Construction, and Materials Specification Handbook (1575 : Design, Construction, and Materials Specification

FAIRFIELD OHIO

STANDARD CONSTRUCTION DRAWINGS

Two-Way Clean Out
(For Sanitary and Storm Applications)

DATE: 05/04/2020	SCALE: NONE	FILE: 2020-027.DWG

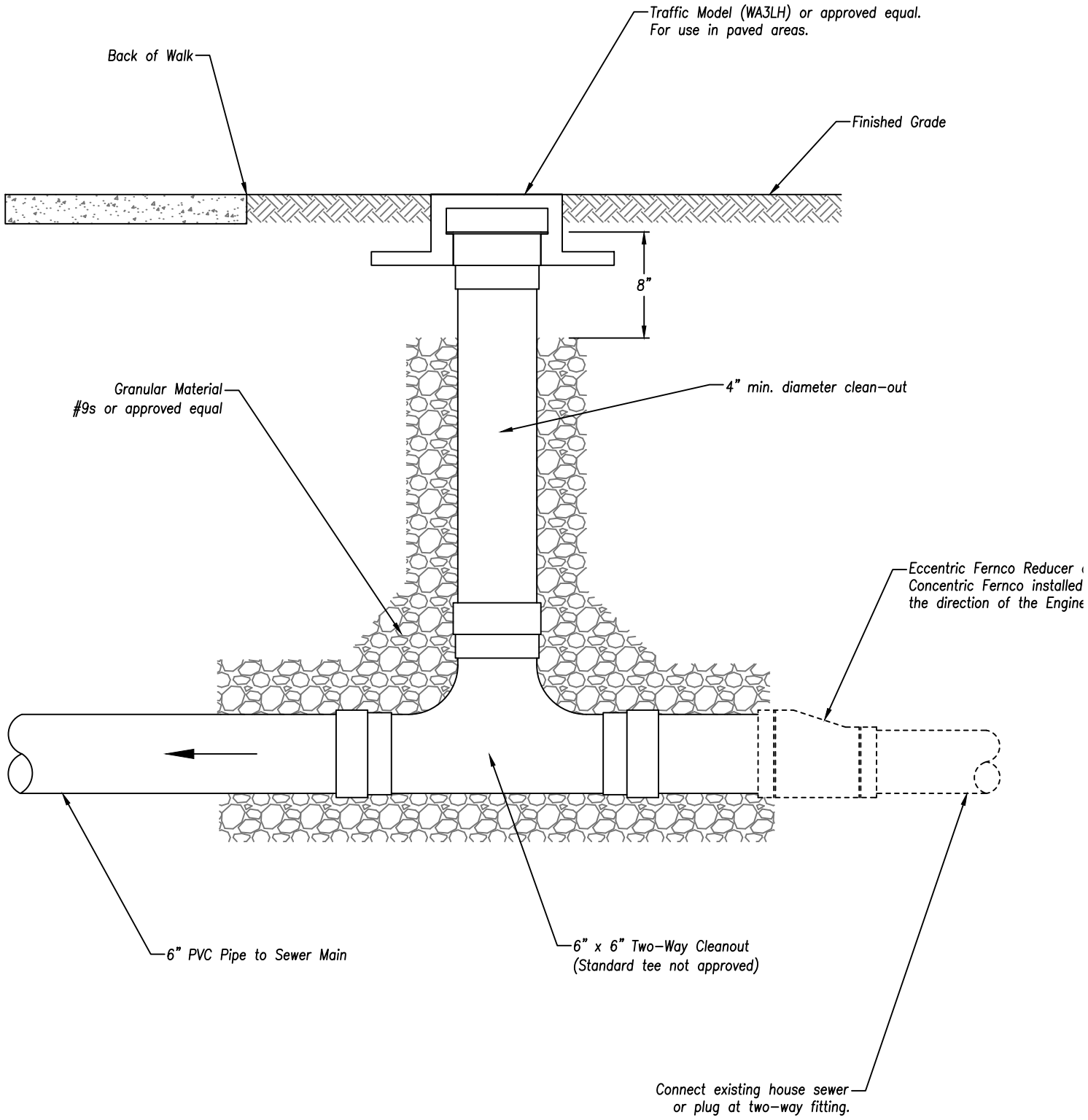

Notes:
1. Directional clean-outs may still be allowed in select circumstances with the approval of the City.
2. Final cleanout cap elevation adjust to finished grade and restoration completed within 90 days of installation.

Attachment: 2020 Design, Construction, and Materials Specification Handbook (1575 : Design, Construction, and Materials Specification

FAIRFIELD OHIO

STANDARD CONSTRUCTION DRAWINGS

Gravity Sewer Creek Crossing

DATE: 05/04/2020 | SCALE: NONE | FILE: 2020-028.DWG

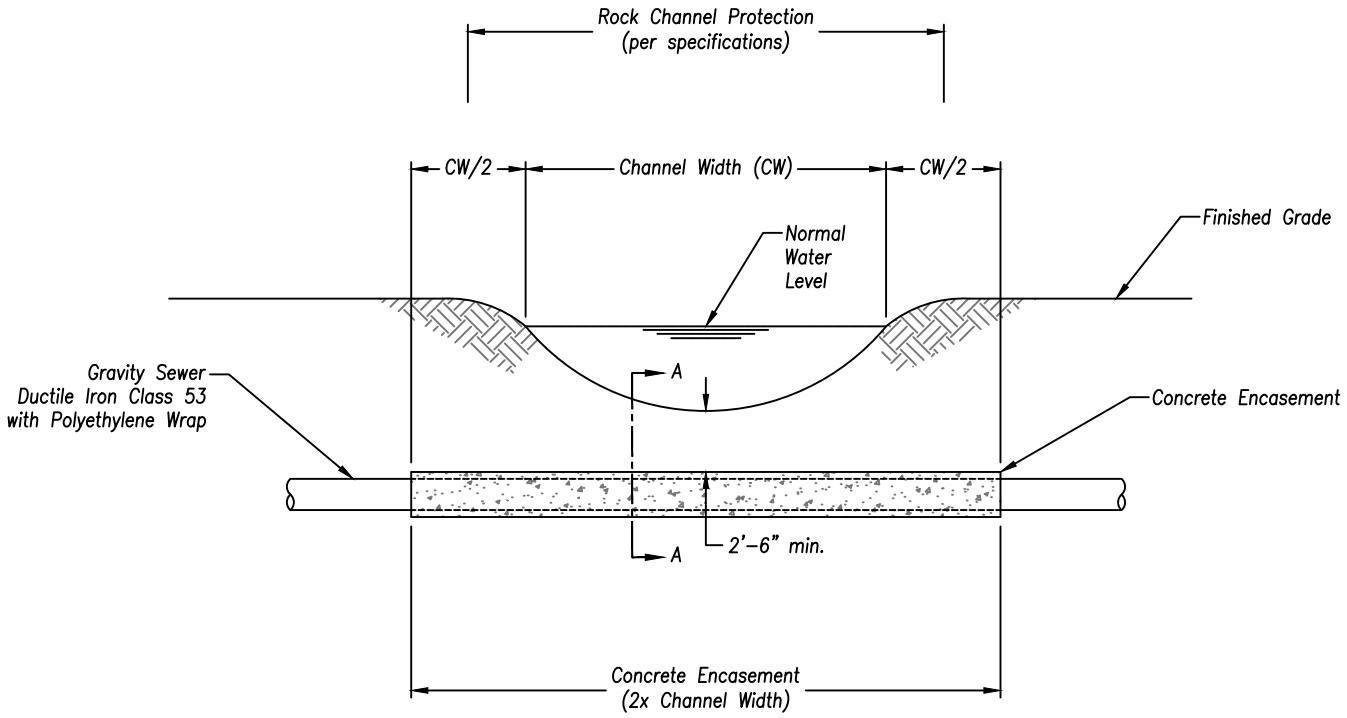

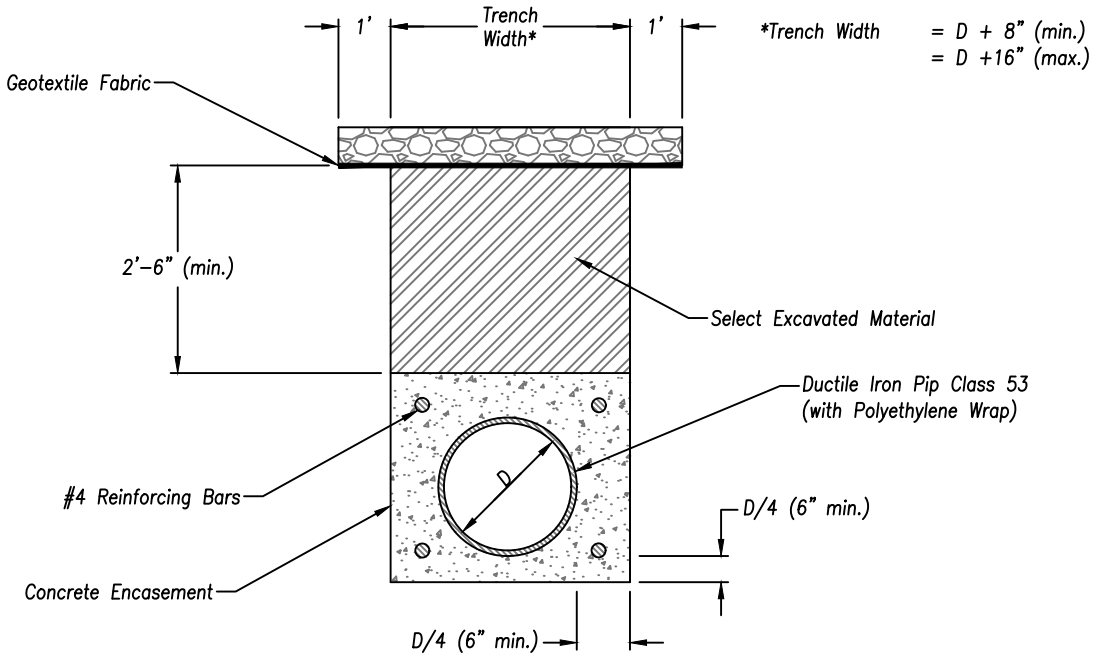

SECTION A-A

Notes:
1. Manholes shall not be installed within the limits of the concrete encasement or the stream banks.
2. Minimum depth of cover for concrete encasement will be reviewed on a case by case basis. Greater depth of cover may be required fo higher velocity streams. Final determination on debth of cover required is to be made by the Director of Public Utilities.

Attachment: 2020 Design, Construction, and Materials Specification Handbook (1575 : Design, Construction, and Materials Specification

FAIRFIELD OHIO

STANDARD CONSTRUCTION DRAWINGS

Standard Manhole (Page 1/2)

DATE: 05/15/2020 | SCALE: NONE | FILE: 2020-029.DWG

Steel Reinforcement Cross-sectional Area, A_s	
MH Depth (feet)	A_s (in^2/ft)
0' – 10'	0.17
11' – 20'	0.22
21' – 30'	0.27
31' – 40'	0.32

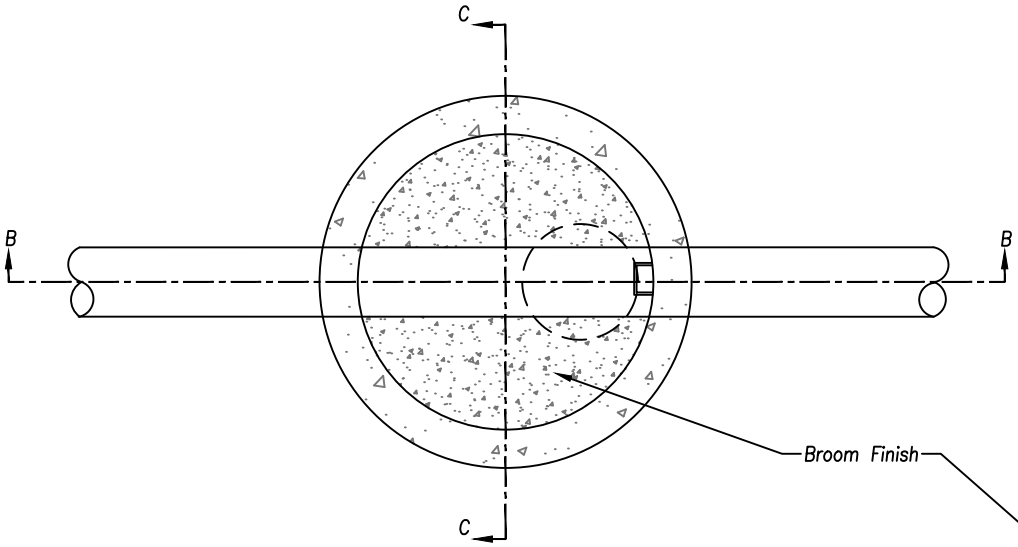

SECTION A – A

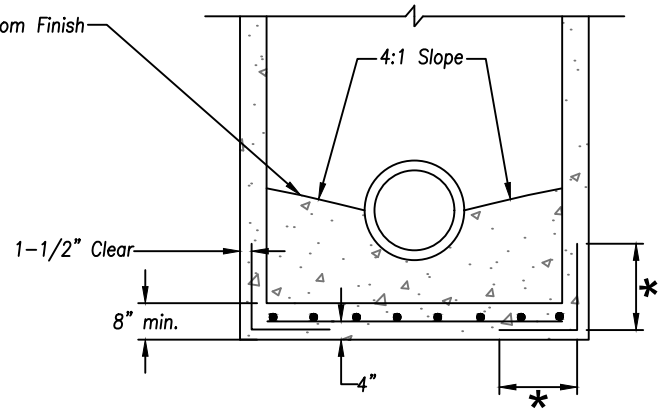

SECTION C – C

*30 x Bc
(12" mi

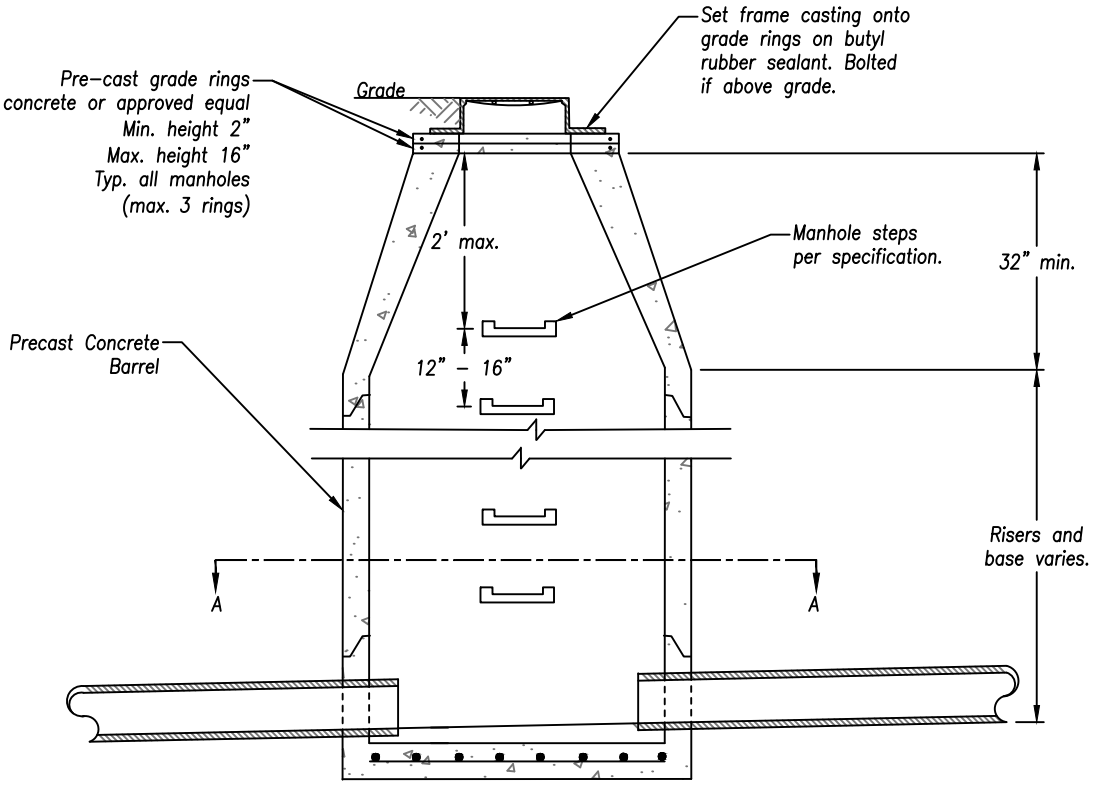

SECTION B – B

Attachment: 2020 Design, Construction, and Materials Specification Handbook (1575 : Design, Construction, and Materials Specification

FAIRFIELD OHIO

STANDARD CONSTRUCTION DRAWINGS

Standard Manhole (Page 2/2)

DATE: 05/15/2020 | SCALE: NONE | FILE: 2020-030.DWG

Min. Base Slab Thickness, BT	
Depth (feet)	BT (inches)
0' – 15'	8"
15.1' – 20'	10"
20.1' – 25'	12"
25.1' – 30'	14"

Wall Thickness, T	
MH Dia. (feet)	T (inches)
4'	5"
5'	6"
6'	7"

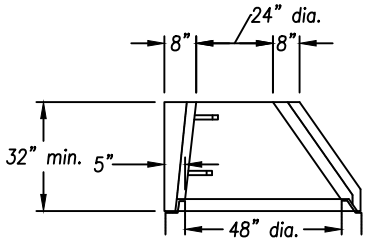

Eccentric Cone Top

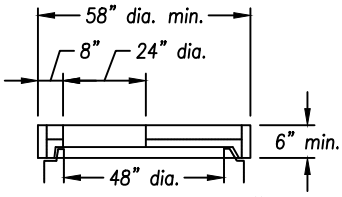

Flat Slab Top, 58" min.

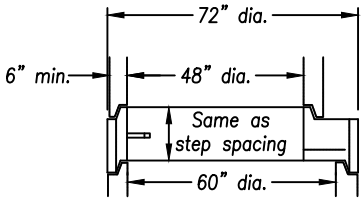

Flat Slab Transition

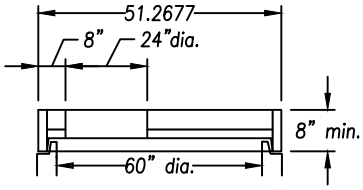

Flat Slab Top, 72" min.

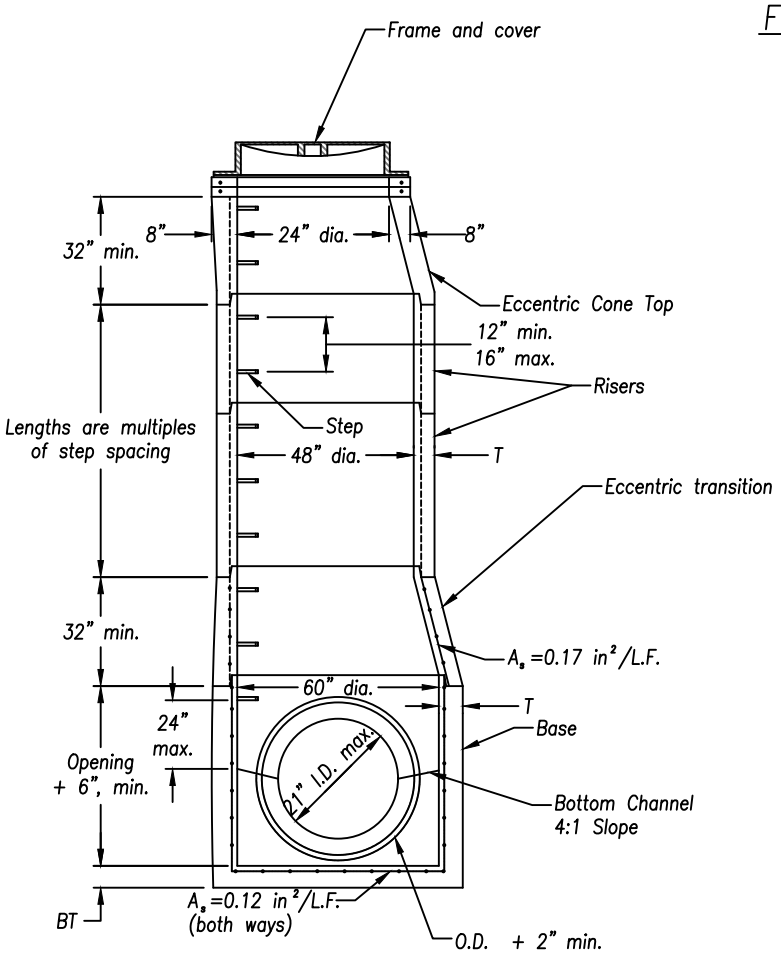

60" Precast Base, 21" and Smaller Pipe

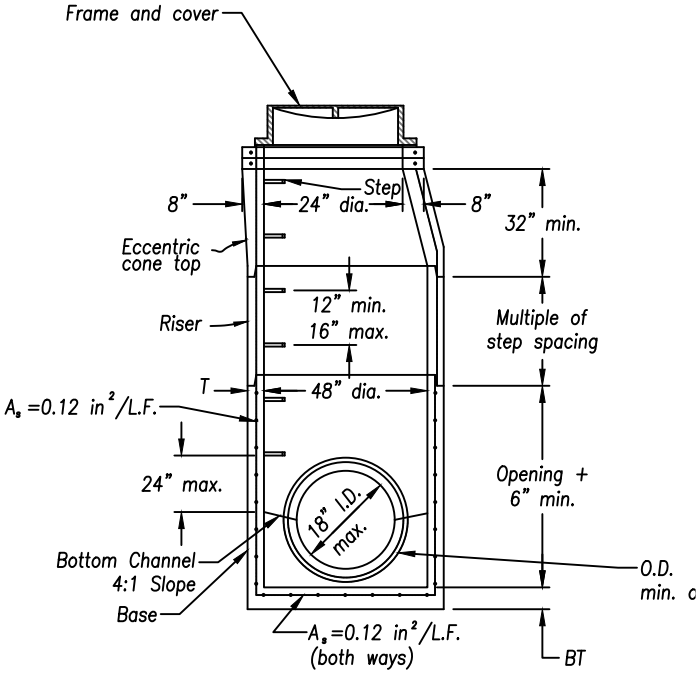

48" Precast Base, 18" and Smaller

Notes:
1. Manholes shall be pre-cast concrete. Pre-cast manhole sections and joints between sections to conform to current applicable ASTM standards.
2. Pre-cast bases are required. Cast in place bases are allowed only on existing sewer mains when approved by the City's Public Utilities Director.
3. Joint seal between pre-cast sections on sanitary sewers will be resilient and flexible gasket joints per ODOT's most current specification.
4. Precast manhole base for pipe larger than 21" requires a submittal drawing and approval by the Public Utilities Director.

Attachment: 2020 Design, Construction, and Materials Specification Handbook (1575 : Design, Construction, and Materials Specification

Standard Control Manhole

DATE: 05/15/2020 | SCALE: NONE | FILE: 2020-031.DWG

Min. Base Slab Thickness, BT	
Depth (feet)	BT (inches)
0' – 15'	8"
15.1' – 20'	10"
20.1' – 25'	12"
25.1' – 30'	14"

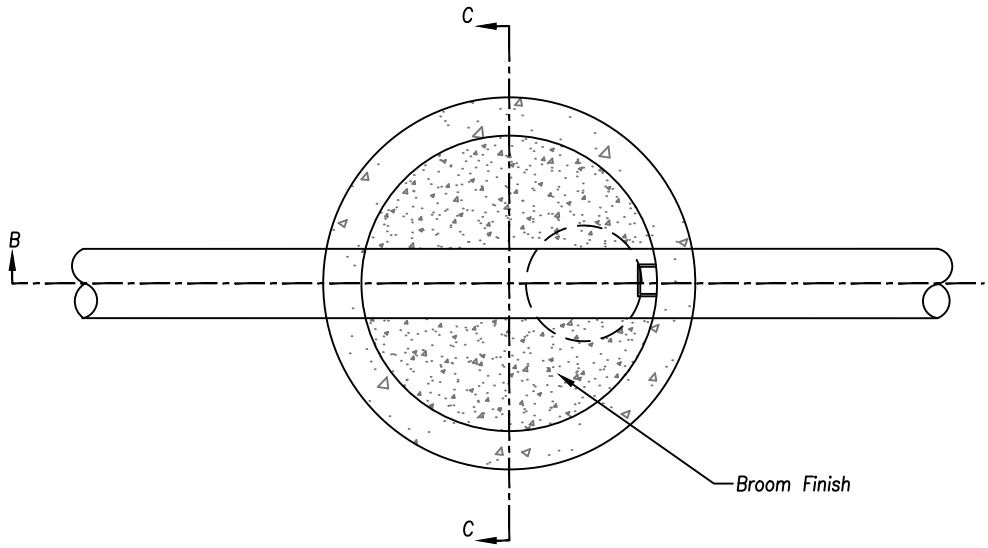

SECTION A – A

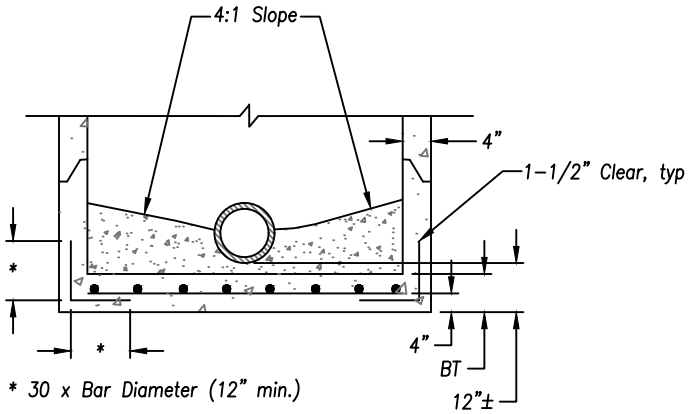

SECTION C – C

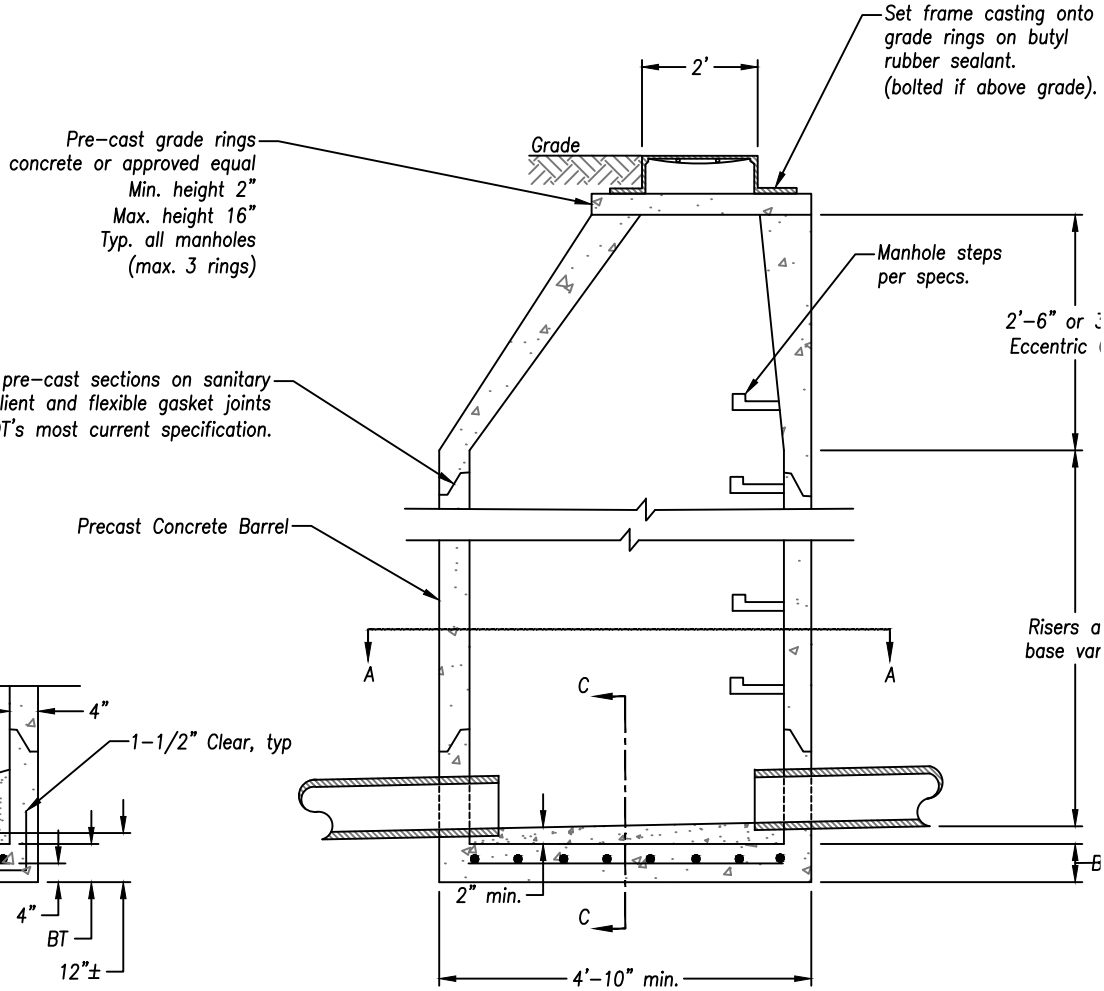

SECTION B – B

Note:
1. Control Manhole placement shall be designed per section 506.06 and approved by the Public Utilities Director and/or their designee.

Attachment: 2020 Design, Construction, and Materials Specification Handbook (1575 : Design, Construction, and Materials Specification

FAIRFIELD OHIO

STANDARD CONSTRUCTION DRAWINGS

Dead End Manhole

DATE: 05/15/2020	SCALE: NONE	FILE: 2020-032.DWG

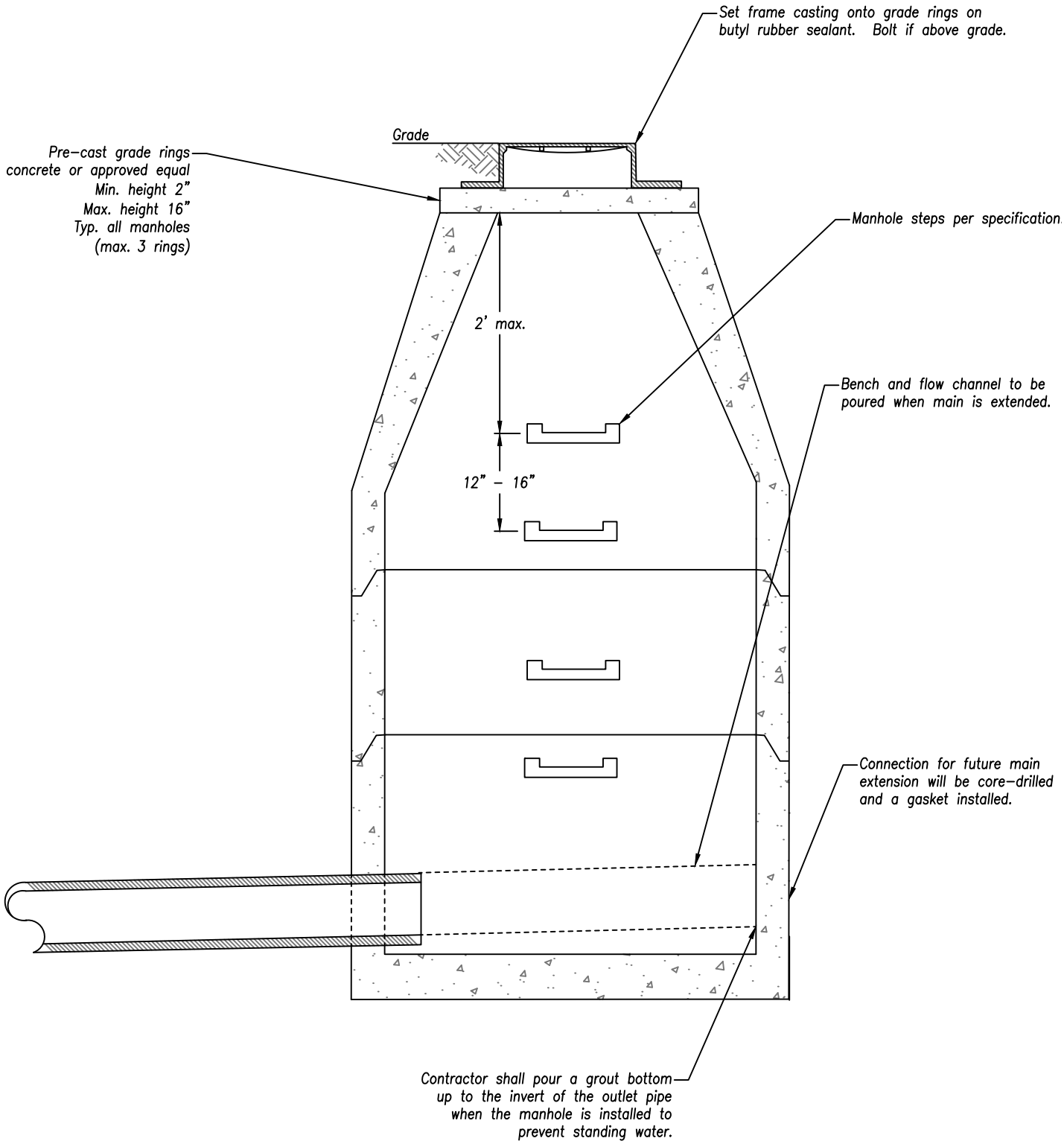

Attachment: 2020 Design, Construction, and Materials Specification Handbook (1575 : Design, Construction, and Materials Specification

Drop Manhole

DATE: 05/15/2020 | SCALE: NONE | FILE: 2020-033.DWG

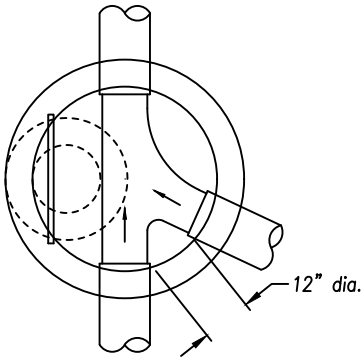

Plan–Standard Type A

Table of Dimensions	
A (inches)	B (inches)
6"	6"
8"	6"
10"	6"
12"	8"
15"	8"
18"	10"
21"	10"
24"	12"
27"	15"
30"	18"

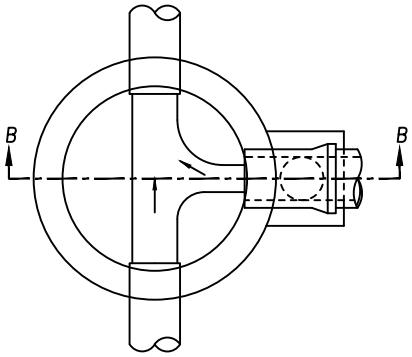

Plan–Standard Type B

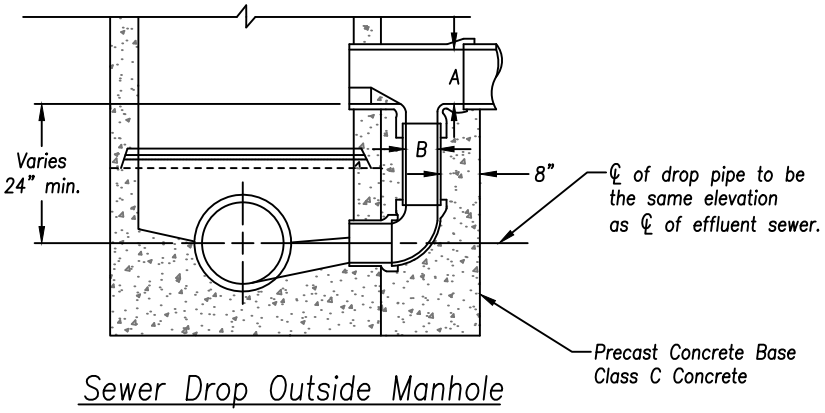

Sewer Drop Outside Manhole

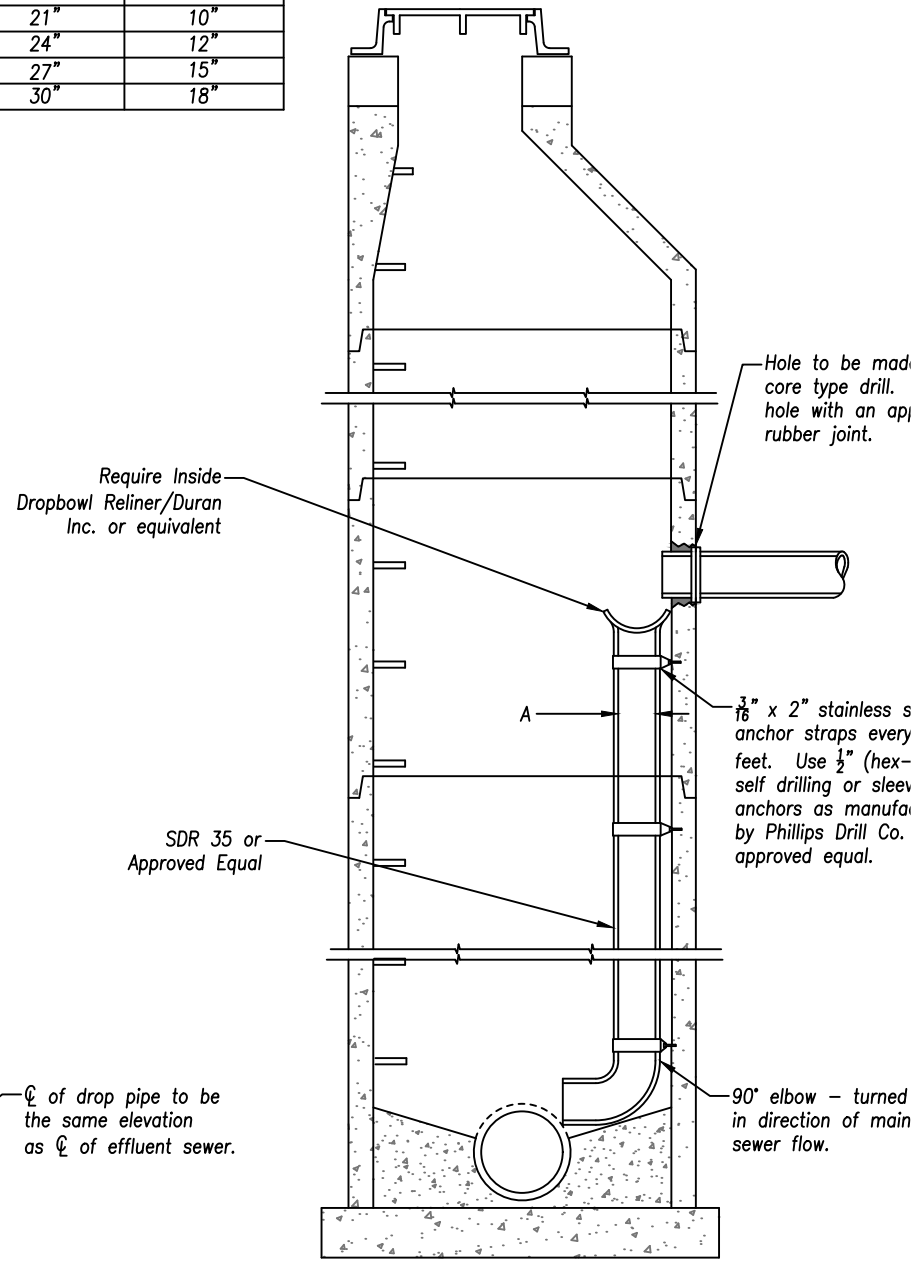

Sewer Drop Inside Manhole

Notes:

1. Inside drop assembly must be approved in writing by the City's Public Utilities Director.
2. Pre-cast concrete risers sealed in place with butyl rubber sealant.

Attachment: 2020 Design, Construction, and Materials Specification Handbook (1575 : Design, Construction, and Materials Specification

Pipe Connections

DATE: 05/15/2020 | SCALE: NONE | FILE: 2020-034.DWG

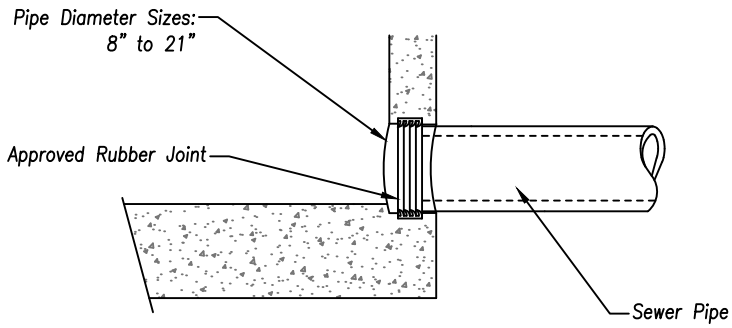

Alternate #1 – New Construction

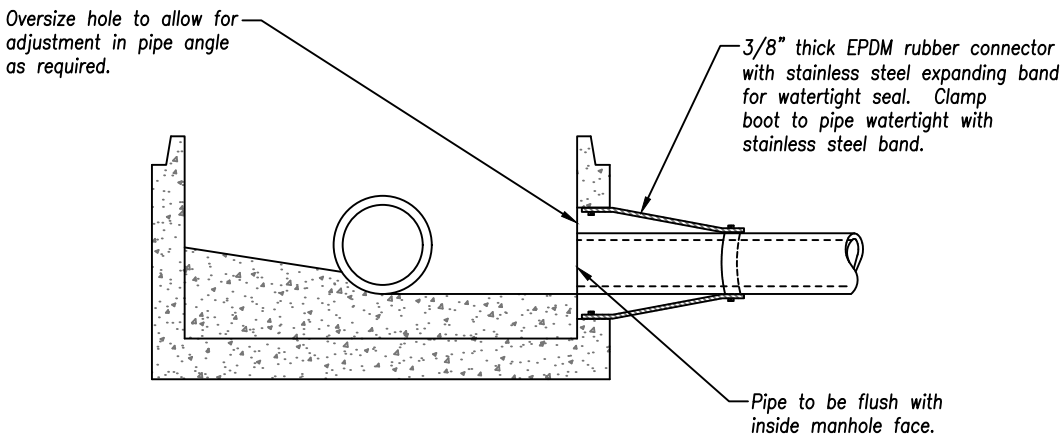

Alternate #2 – New Construction

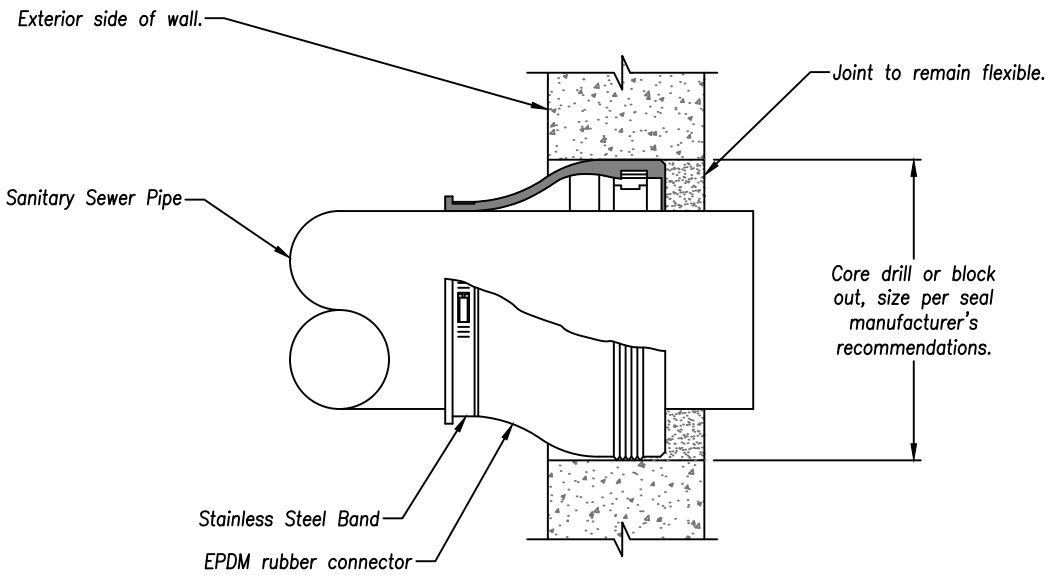

Alternate #3 – Existing Manhole

Notes:
1. Wall penetrations shall be located within a riser section and not a wall joint.

FAIRFIELD OHIO

STANDARD CONSTRUCTION DRAWINGS

Force Main Drop Connection in Existing Manholes

DATE: 05/04/2020 | SCALE: NONE | FILE: 2020-035.DWG

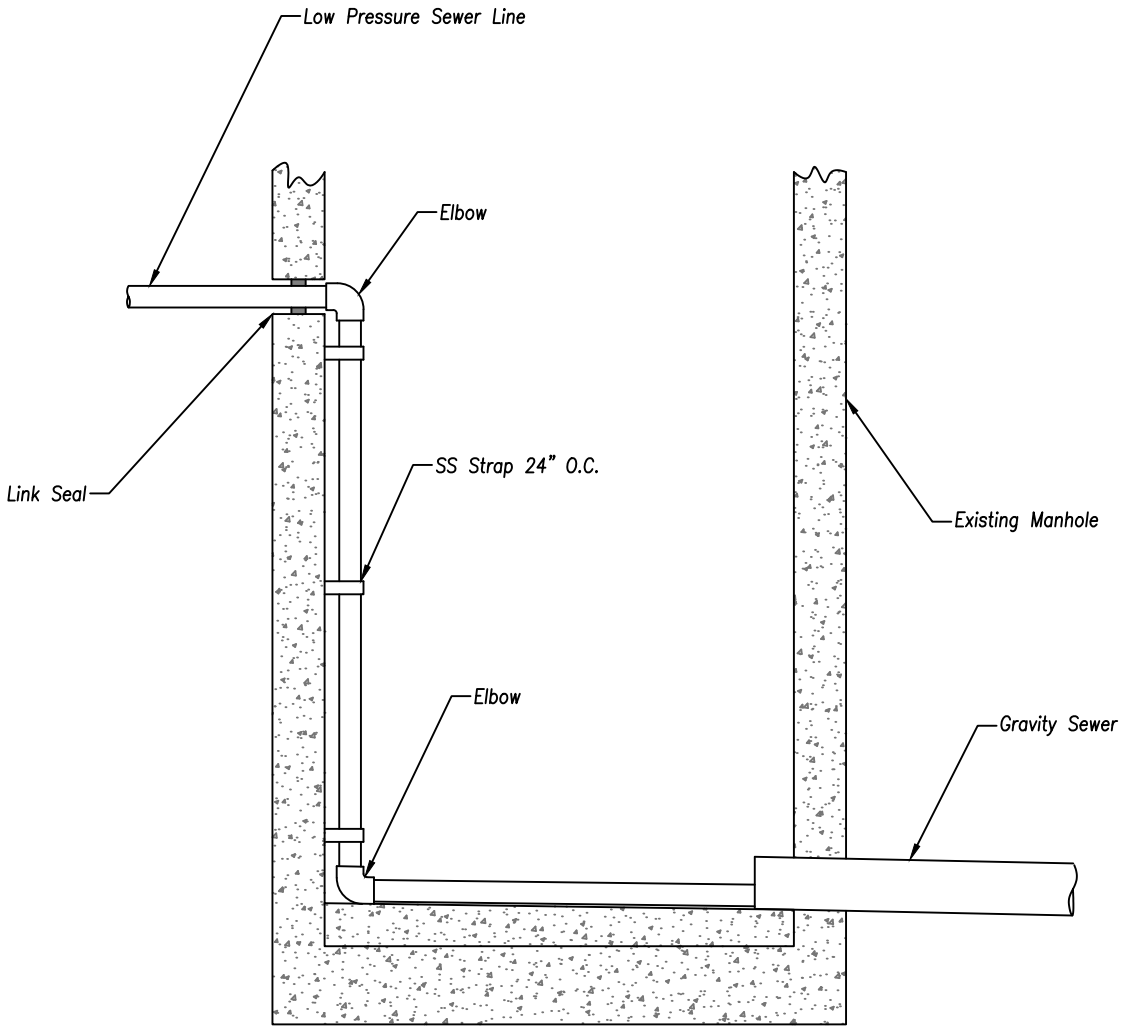

Attachment: 2020 Design, Construction, and Materials Specification Handbook (1575 : Design, Construction, and Materials Specification

FAIRFIELD OHIO

STANDARD CONSTRUCTION DRAWINGS

Force Main Lateral Installation

DATE: 05/04/2020	SCALE: NONE	FILE: 2020-036.DWG

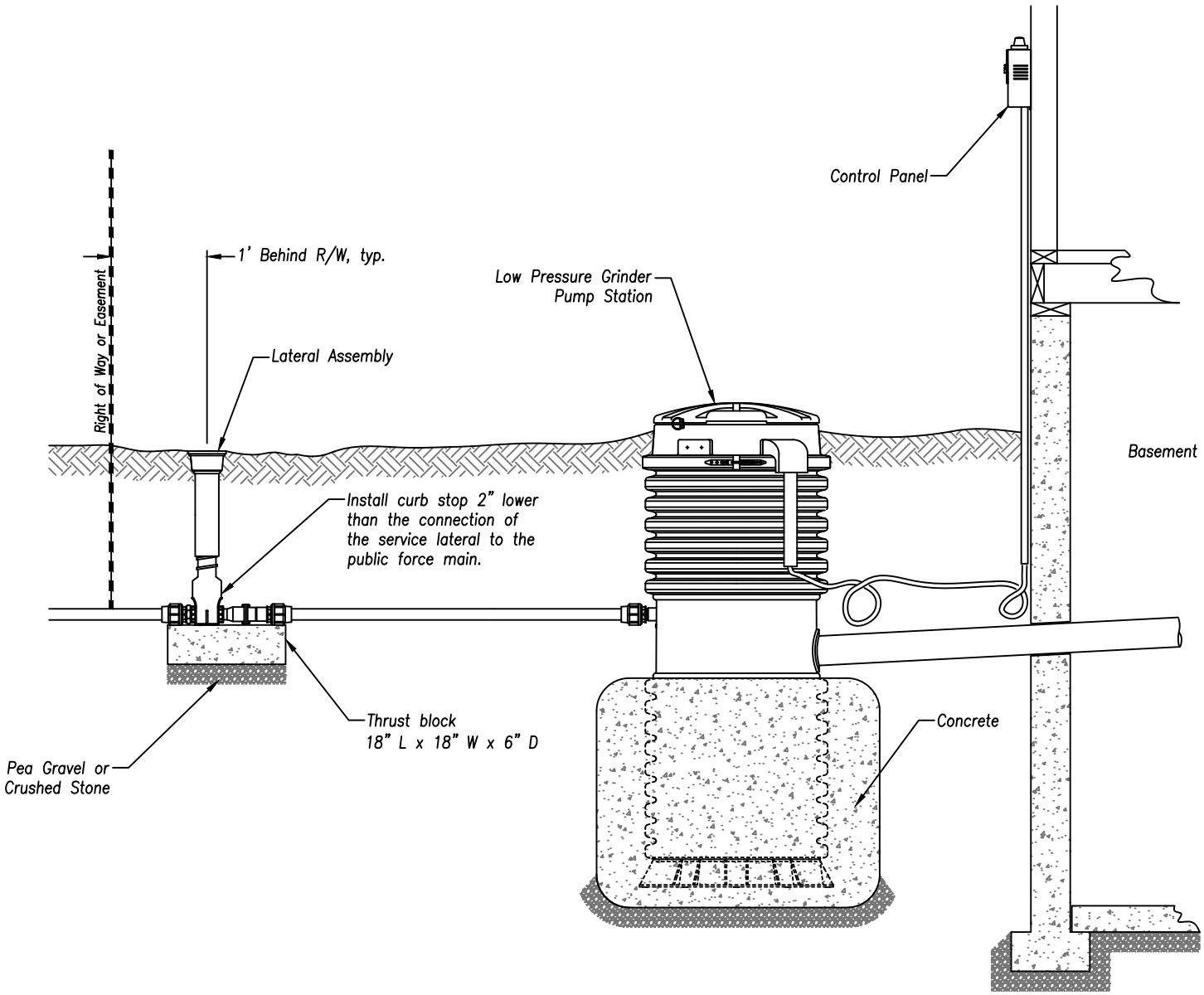

Attachment: 2020 Design, Construction, and Materials Specification Handbook (1575 : Design, Construction, and Materials Specification

FAIRFIELD OHIO

STANDARD CONSTRUCTION DRAWINGS

Force Main Grinder Pump Station Installation

DATE: 05/04/2020	SCALE: NONE	FILE: 2020-037.DWG

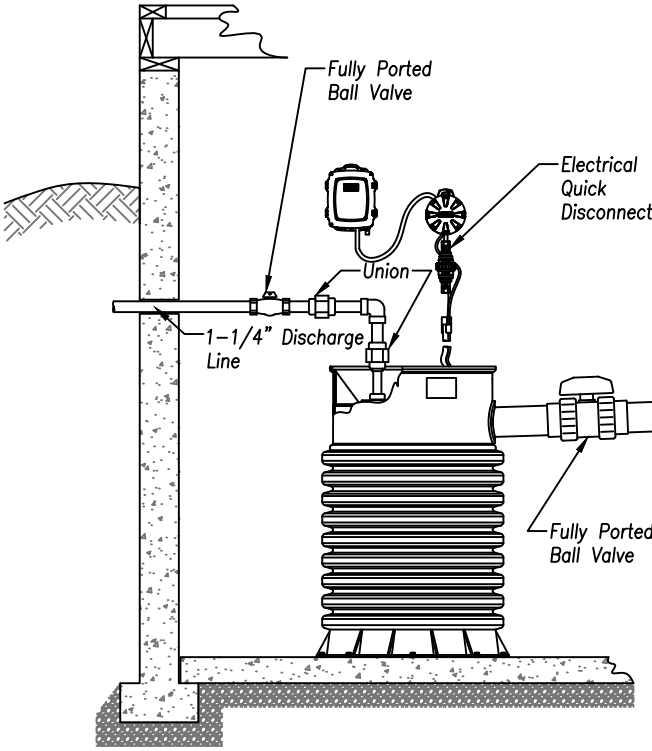

Interior Installation

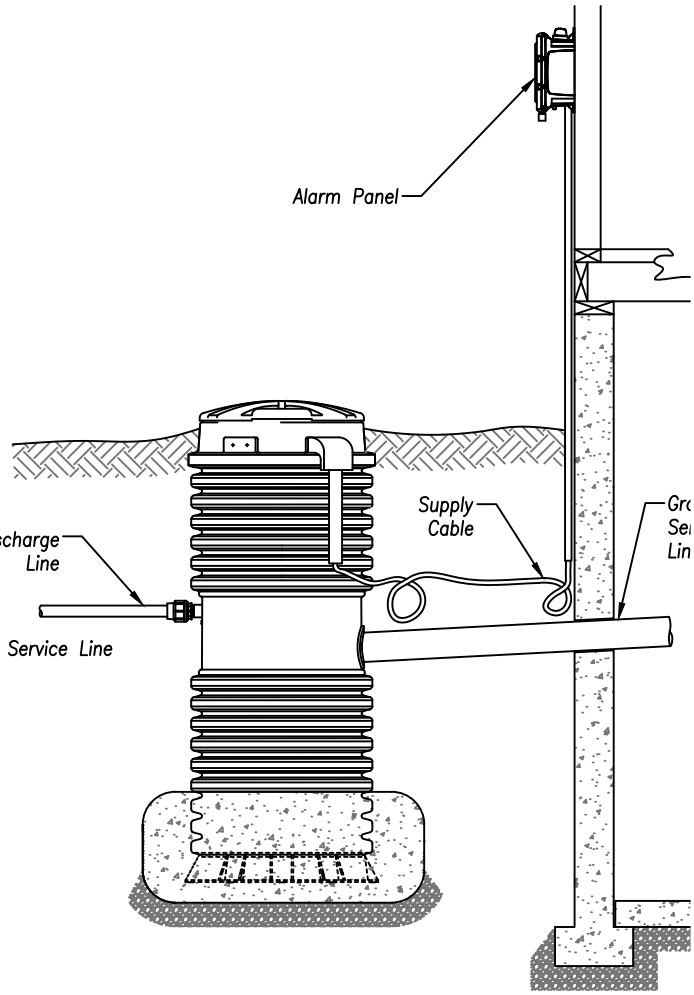

Exterior Installation

Attachment: 2020 Design, Construction, and Materials Specification Handbook (1575 : Design, Construction, and Materials Specification

FAIRFIELD OHIO

STANDARD CONSTRUCTION DRAWINGS

Force Main Terminal Flushing Connection

DATE: 05/04/2020	SCALE: NONE	FILE: 2020-038.DWG

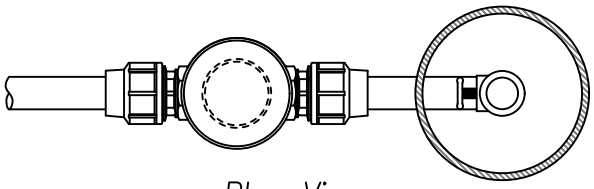

Plan View

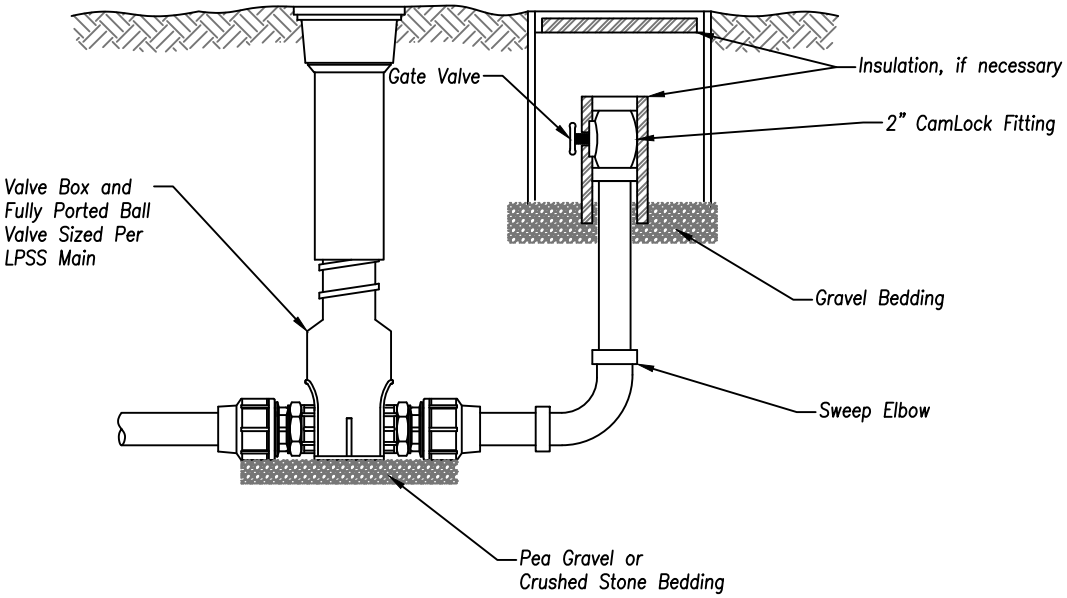

Attachment: 2020 Design, Construction, and Materials Specification Handbook (1575 : Design, Construction, and Materials Specification

FAIRFIELD OHIO

STANDARD CONSTRUCTION DRAWINGS

Force Main Flushing Connection on LPSS Main

DATE: 05/08/2020 | SCALE: NONE | FILE: 2020-039.DWG

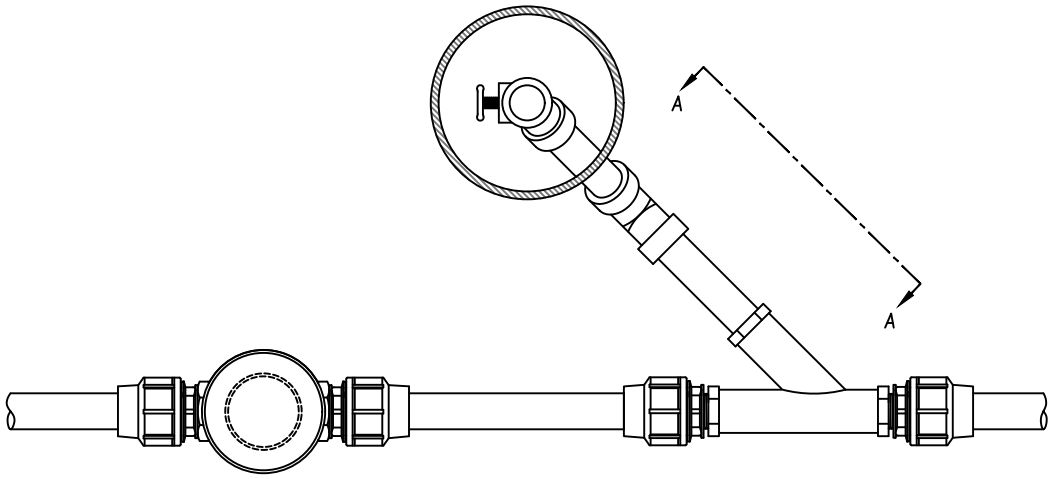

Plan View

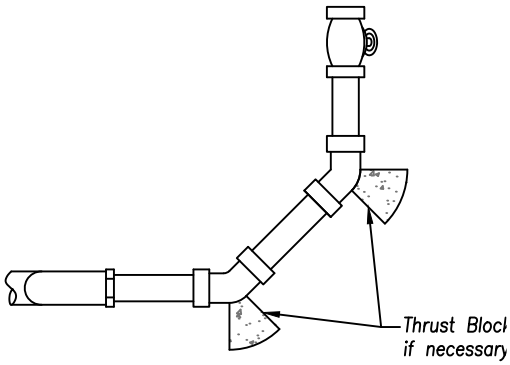

SECTION A – A

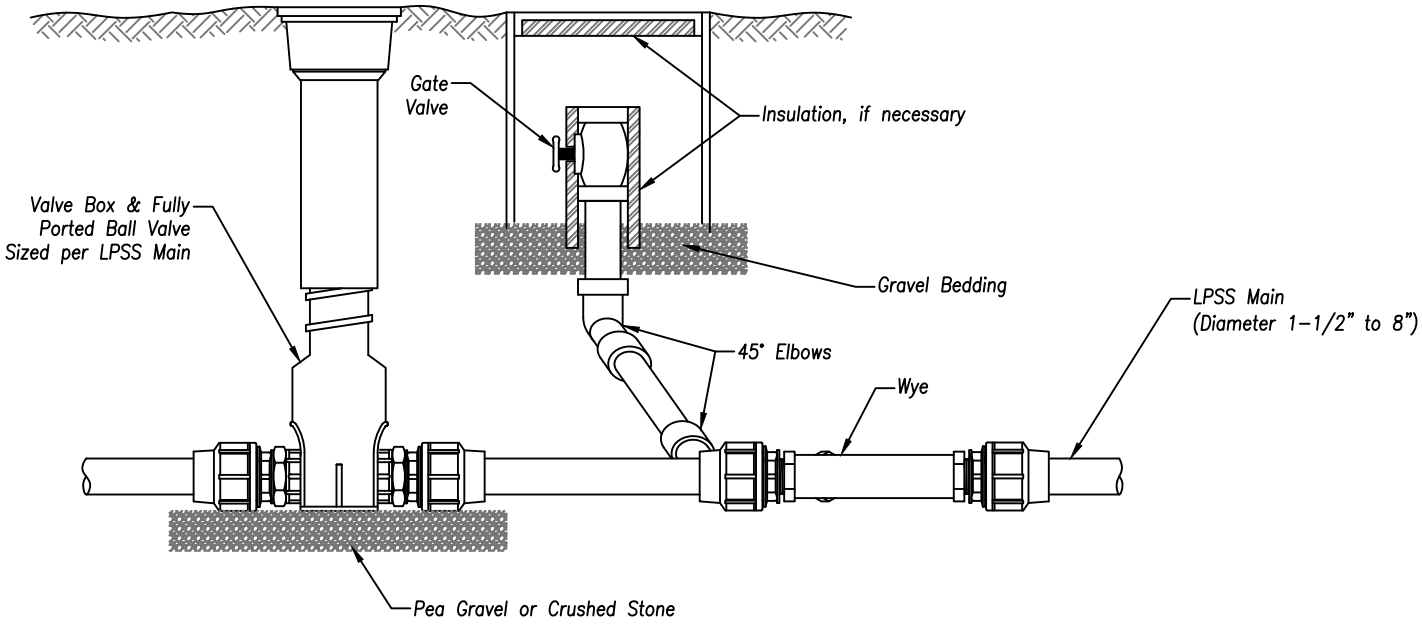

Attachment: 2020 Design, Construction, and Materials Specification Handbook (1575 : Design, Construction, and Materials Specification

FAIRFIELD OHIO

STANDARD CONSTRUCTION DRAWINGS

Grease Interceptor - Oil/Water Separator (Baffled)

DATE: 05/04/2020 | SCALE: NONE | FILE: 2020-040.DWG

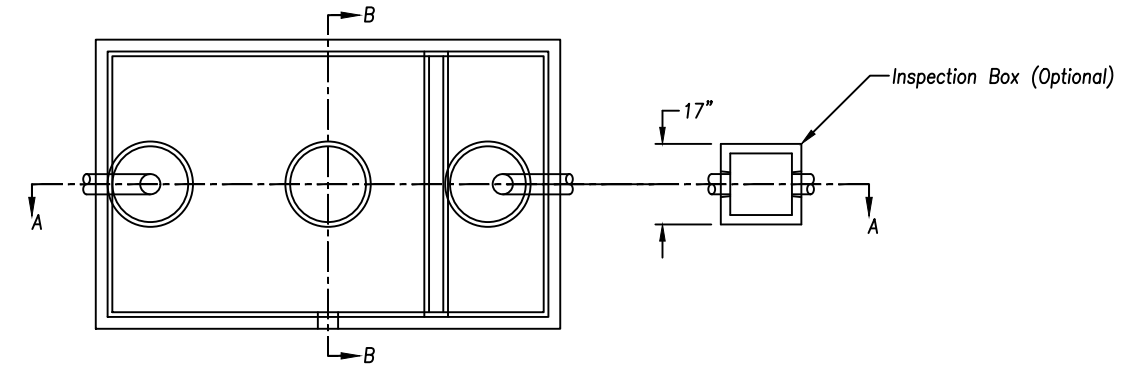

Plan View

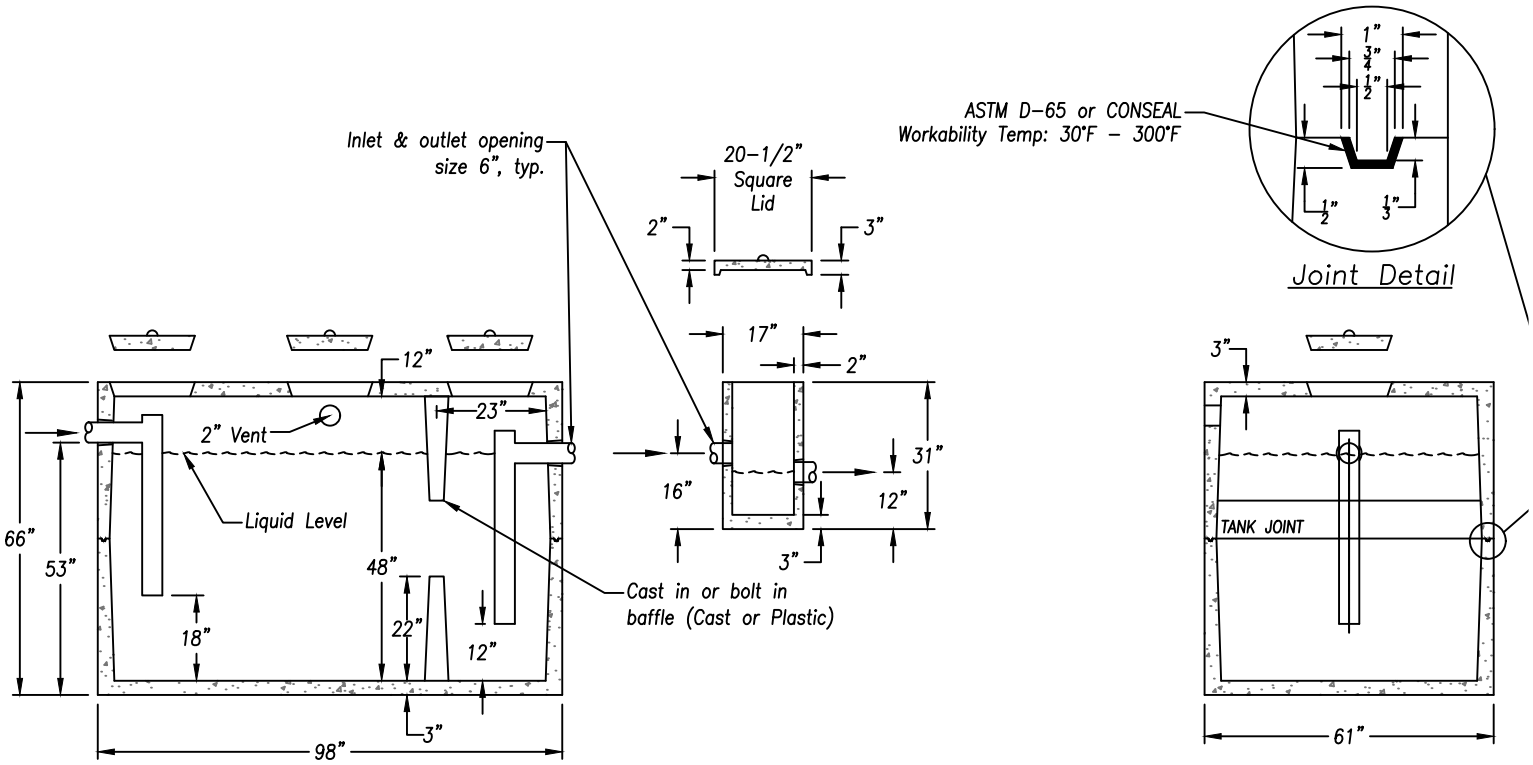

SECTION A-A

SECTION B-B

Notes:

1. Access manholes with a minimum diameter of 24" shall be provided over each grease interceptor chamber. The access manhole shall extend at least to finished grade and be designed and maintained to prevent water inflow or infiltration. The manholes shall be readily removable covers to facilitate inspection, grease removal, and wastewater sampling activities.
2. Provide a minimum of two manholes.
3. Grease interceptor shall have a capacity of at least 1000 gallons.
4. Piping by others. 4" PVC Schedule 40 or as directed by the Public Utilities Director.

Attachment: 2020 Design, Construction, and Materials Specification Handbook (1575 : Design, Construction, and Materials Specification

FAIRFIELD OHIO

STANDARD CONSTRUCTION DRAWINGS

Exterior Door Identification

DATE: 05/13/2020	SCALE: NONE	FILE: 2020-041.DWG

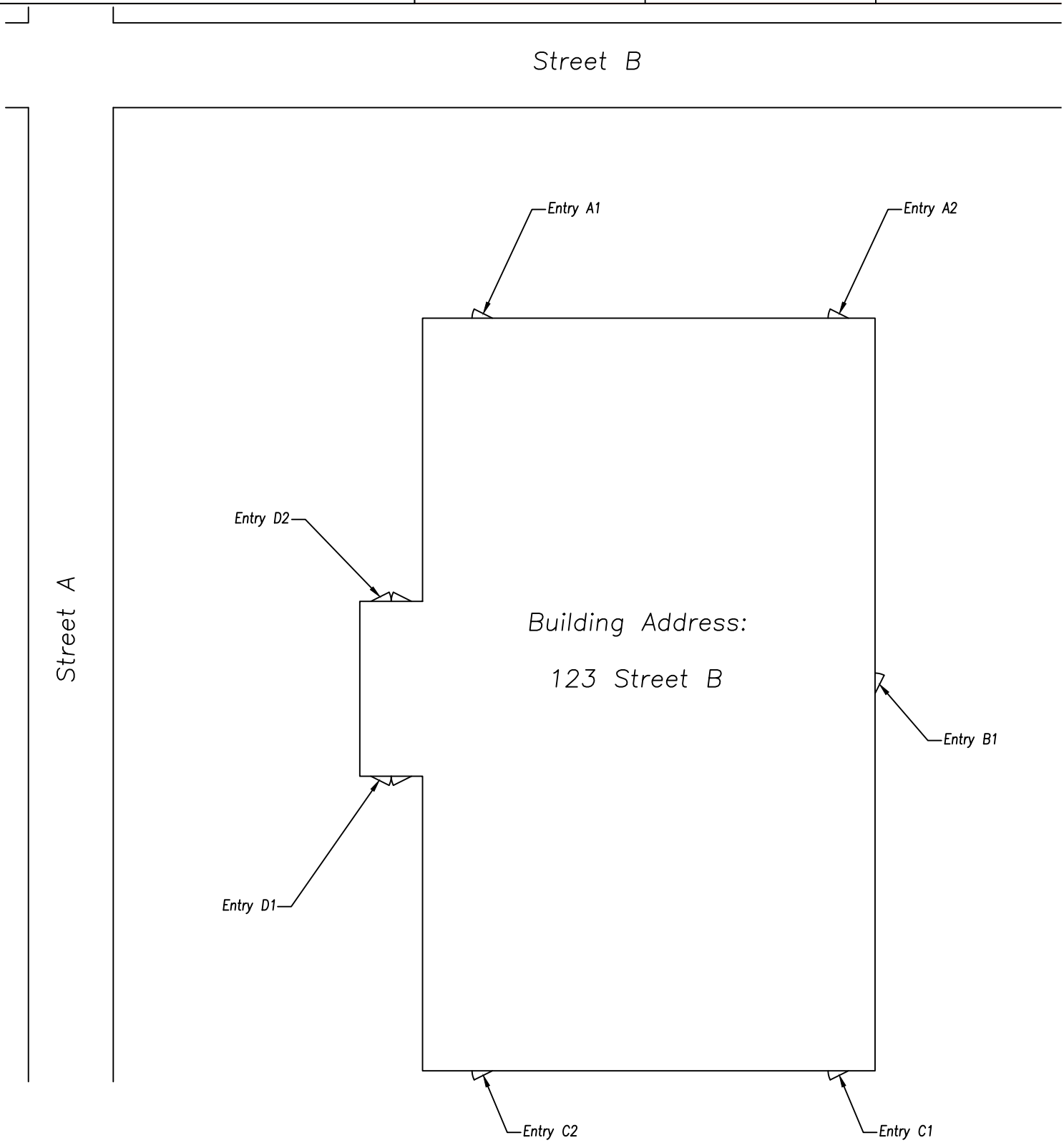

Notes:

1. Exterior door identification may be requested or required by Fairfield Police or Fire Departments.
2. All exterior doors (personnel, overhead, etc.) shall receive a unique alpha-numeric designation. The alphabetic character signifies the side of the building while the numeric character signifies the door number.
3. The "A" side of the building shall be the side that faces the street matching the building address. "B", "C", and "D" sides of the building shall be named sequentially in a clockwise manner. Door numbering on any given side shall increase in a clockwise direction.
4. Characters labeling each door are recommended to be 6" or greater.

Attachment: 2020 Design, Construction, and Materials Specification Handbook (1575 : Design, Construction, and Materials Specification

ORDINANCE NO. _____

ORDINANCE TO AMEND SECTION 1113.01 OF ORDINANCE NO. 166-84, THE CODIFIED ORDINANCES OF FAIRFIELD, OHIO, TO ADOPT AN AMENDED DESIGN, CONSTRUCTION AND MATERIALS SPECIFICATION HANDBOOK, 2020 SIXTH EDITION.

BE IT ORDAINED by the Council of the City of Fairfield, Ohio, that:

Section 1. Section 1113.01 of Ordinance No. 166-84, The Codified Ordinances of Fairfield, Ohio, is hereby amended to read as follows:

1113.01 DESIGN CONSTRUCTION AND MATERIAL SPECIFICATION HANDBOOK.
All construction shall be done in compliance with the "Design Construction and Material Specification Handbook" **2020 SIXTH EDITION, WHICH IS HEREBY ADOPTED AND INCORPORATED HEREIN BY REFERENCE. A COPY OF THE 2020 SIXTH EDITION HANDBOOK IS ON FILE IN THE OFFICE OF THE CLERK OF COUNCIL.**

Section 2. This Ordinance shall take effect at the earliest period allowed by law.

Passed _____ _____
Mayor's Approval

Posted _____

First Reading _____ Rules Suspended _____

Second Reading _____

Third Reading _____

ATTEST:

_____
Clerk of Council

This is to certify that this Ordinance has been duly published by posting and summary publication as provided by Charter.

_____
Clerk of Council

Active Clients\City of Fairfield\Ordinances\2020\Design Construction and Materials-Ord

Attachment: Design Construction and Maintenance-Ord (1575 : Design, Construction, and Materials Specification Handbook)

FAIRFIELD

THE FIELD IS OPEN

DEPARTMENTAL CORRESPONDENCE

To: Mayor Miller and City Councilmembers
From: Scott Lepsky, Planning Commission Chairman
Subject: Planning Commission Recommendations
Date: 8/26/2020

Please be advised that at the Planning Commission meeting held on Wednesday, August 26, 2020, the Planning Commission voted 6-0 in favor of recommending approval of the updates to the Design, Construction, and Materials Specification Handbook. The draft handbook may be viewed online here: 2020 Construction Handbook Draft.

cc: Mark Wendling, City Manager
Alisha Wilson, Clerk of Council
Steve Wolterman, Law Department
John Clemmons, Law Director

FAIRFIELD
OHIO

DEPARTMENTAL CORRESPONDENCE

Date: September 15, 2020

To: Fairfield City Council

From: Greg Kathman, Director of Development Services GK

Subject: Design, Construction and Materials Specification Handbook

Staff has identified a minor clarification that is needed in Chapter 506.02 of the proposed update to the Design, Construction and Materials Specification Handbook. The proposed clarification is summarized below, with new text indicated in bold capitalized text and removed text shown as strike-through.

506.02 Manhole Castings

Manhole castings shall be made of cast iron, and conform to AASHTO M199 or current standard or Low-Density Traffic H-20 Loading to support traffic, or current standard. The manhole frame~~/lid~~ shall be East Jordan **00160014 WITH A** 00160062 (Solid)/0016026 (Vented) **COVER** or Neenah 1767-2001 Frame with **A** 1767-5027 ~~Cover~~ (Solid)/1767-5023 (Vented) **COVER** and have "SANITARY SEWER" factory cast into the lid...

Staff requests that Council amend the document to include these changes before the third reading and vote at its meeting on September 28.

Attachment: HandbookAmendment (1575 : Design, Construction, and Materials Specification Handbook)

City Council Ordinance
Regular Meeting - September 28, 2020

Submitted by: Ben Mann,
Submitting Department: Public Works

Subject:
Palomino Estates (Palomino Court) Public Acceptance

Legislation Title:
Ordinance to authorize the release of the maintenance bond and accept the public improvements for the Palomino Estates Subdivision.

Recommendation:
It is recommended that City Council authorize and direct preparation of legislation accepting these public improvements.

Background/Synopsis:

This project to create a public street located on the west side of McCormick Lane (just south of where Symmes Road ends into the City's soccer fields) was developed by the Bown Enterprises as Palomino Estates. This is a nine-lot subdivision with one lot remaining for development.

This project involved the construction of approximately 600 feet of new road ending in a cul-de-sac. Included in this work was asphalt pavement with an aggregate base, curb and gutter, storm sewer, sanitary sewer, waterline, and sidewalk. This project was inspected by the Public Works Department and the Public Utilities Department to make sure that any previously noted deficiencies have been addressed. The developer has completed all items except street trees for which payment has been submitted to the City as required by City ordinance. The street trees will be planted by Public Works this fall. The dedication plat for this street was approved and accepted by Planning Commission in 2011.

Financial Impact:

None.

Emergency Provision Explanation:

Not requested.

Rule Suspension Requested:
No

Emergency Provision Needed:

No

Attachments:
1. Palomino Estates Plat
2. Palomino Estates-Ord

OR 8378 PG 1951

The undersigned, being the owner of 9.867 acres in part of Lot #226 as known and designated on the list of lots in the City of Fairfield and situated in Section 4, Town 1, Range 2, Butler County Ohio, do hereby assent to and adopt the accompanying plat of of subdivision to be known as "PALOMINO ESTATES" and do hereby dedicate to the public forever, in accordance with the laws in such cases made and provided, in the streets and roadways as shown on said plat, and declare the same to be free and unencumbered.

The Title acquired by Official Record 7135, Page 485 & Official Record 1729, Page 393
Utility easements are provided on this plat and designated as such. The easement area of each lot shall be maintained continuously by the owner of the lot. Within these easements, no structure, planting or other material shall be placed or permitted to remain which may obstruct, retard or change the direction of the flow of the water through the drainage channel in the easement. No improvements or impediment of any kind shall be made on said utility easement which will interfere with access to the said utility. The City of Fairfield and/or the Utility Company shall not be responsible to any present or future owner(s) of said lot for any damages on said easement to sod, shrubbery, or other improvements, natural or artificial, by reason of entry for purposes of constructing, maintaining, replacing or repairing the utility. The erection or placement of any structure and planting or placement of any trees on said utility easement shall be prohibited.

The above easements are also provided for other uses as designated and shall be used for the construction of storm water drains, open channels, public and private sewers, pipelines for the supplying of water, cable television and for any other public or quasi public utility or function, conducted, maintained or performed by ordinary methods beneath or above the surface of the ground together with the right of ingress and egress over and across lots to and from said easements.

Any lot transferred shall have a minimum width and area substantially the same as shown on the accompanying plat and only one principal building will be permitted on any such lot.

Any future splitting of any lot that results in an additional building site being created shall be by Replat only.

Private driveways, parking lots and other paved areas or structures should not be constructed over private water or sewer service lines within the public road right-of-way or within easement areas for the public utilities. Should this occur, the property owner will be held responsible for the protection and repair of and providing access to any curb stops, meter pits, manholes, cleanouts, etc. installed in conjunction with these private service lines and for any damage or restoration of the paved surfaces or structures that may result from the future operation, maintenance, repair or replacement of said service lines and appurtenances.

The City of Fairfield does not accept any responsibility for the relocation, repair or replacement of any other utility installed within five (5) feet of the centerline of any sanitary sewer main or water main.

All lots shown hereon shall be served by public sanitary sewers and water.

Easements outside the platted area will become null and void when said area is platted.

All sanitary sewers shown on this plat shall be subject to the same charges and same rates as required for the citywide system.

Typical five (5) foot drainage easement to be provided on both sides of every lot line, inside the platted area, not presently labeled with an easement.

All public improvements included as part of this subdivision shall be constructed and designed in accordance with the current requirements of the Design, Construction and Material Specification Handbook for Fairfield, Ohio and all other applicable ordinances by the City of Fairfield.

The streets shall be constructed within one year from the date the plat is approved by the Planning Commission of the City of Fairfield and shall be maintained and kept in repair for one year from the date the constructed streets are approved by the City Council.

The lots are numbered from 13917 to 13925 inclusive and shall be subject to the protective covenants and restrictive provisions as set forth in Official Records _____, Page _____ of the Butler County, Ohio records.

Roof drains, foundation drains, and other clean water connections to the sanitary sewer system are prohibited.

Image ID: 00000786434S Type: OFF
Recorded: 10/21/2011 at 03:07:53 PM
Fee Amt: $172.80 Page 1 of 2
Workflow# 0000111186-0001
Butler County, Ohio
Dan Crank COUNTY RECORDER
File# 2011-00042367
BK 8378 PG 1951

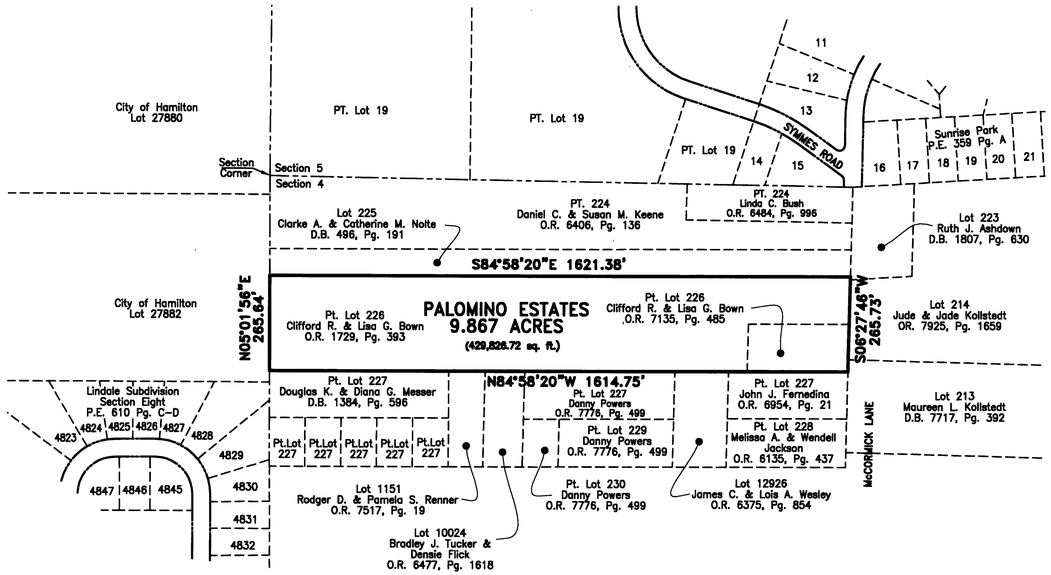

PROPERTY MAP

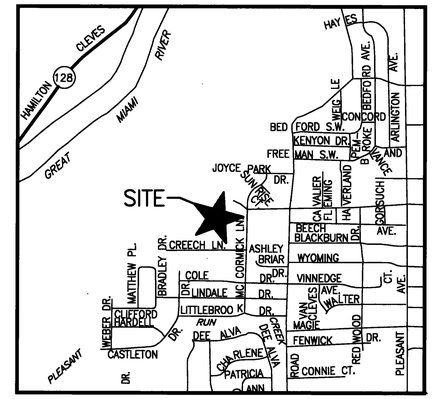

VICINITY MAP

NOT TO SCALE

OWNERS

Cliff Bown
CLIFF BOWN

Lisa Bown
LISA BOWN

In witness whereof, we have unto set our hand on this 30 day of September A.D., 2011.

Owner
Bown Enterprises, Inc.
Cliff Bown President
Cliff Bown, President

STATE OF OHIO S.S.

The foregoing instrument was acknowledged before me this 30 of September AD., 2011 by Cliff Bown, on there behalf.

Jennifer L Koval
Notary Public, State of Ohio
8-23-12
My Commission Expires

JENNIFER L. KOVAL
Notary Public, State of Ohio
My Commission Expires 8-23-2012

In witness whereof, we have unto set our hand on this _____ day of _____ A.D., 20___.

BENCHMARK

Mag Nail at the Edge
of Pavement of McCormick Lane
Elevation=577.18'

NOTES:

1. Basis of Bearings: State Plane Coordinate System (NAD 1983), Ohio South Zone 3402

2. References: Plat Envelope 601, Page A
Plat Envelope 610, Page C-D
Survey Volume 44, Page 67
Survey Volume 1, Page 206
Survey Volume 21, Page 181
Survey Volume 6, Page 74
Survey Volume 4, Page 28
Survey Volume 18, Page 196
Survey Volume 37, Page 11

3. Lines of occupation where they exist generally agree with boundary lines unless otherwise shown on plat.

4. All monumentation is in good condition unless otherwise shown.

Approved by the planning Commission of the City of Fairfield, Ohio, this 14th day of July A.D., 2010.

by: Jerry L. Dailey / TB
President

Entered for Transfer October 21 A.D., 2011.
Transferred October 21 A.D., 2011.

Roger Reynolds
Auditor, Butler County, Ohio

by: Rachel Sanders
Deputy

Filed for Record October 21, 2011 at 3:07 P.M.
Recorded October 21, 2011 Pages 2
Plat Envelope 8378 Pages 1951-1952

Dan Crank
Recorder, Butler County, Ohio

by: [illegible]
Deputy

File 2011-00042367 Fee $ 172.80

OWNER/ DEVELOPER
CLIFF AND LISA BOWN
890 ABBOTT DRIVE
FAIRFIELD, OH 45014
(513) 309-4475

ENGINEERS/ SURVEYORS
BAYER BECKER
6900 TYLERSVILLE ROAD
SUITE A
MASON, OHIO 45040
PH: 513-336-6600
FAX: 513-336-9365

N

0 200' 400'
SCALE 1" = 200'

Item	Revision Description	Date	Dwn:	Chk:

PALOMINO ESTATES
PART LOT #226 AND LOT #226
SECTION 4, TOWN 1, RANGE 2
CITY OF FAIRFIELD
BUTLER COUNTY, OHIO
RECORD PLAT

bayer becker
engineers • architects • planners
landscape architects • surveyors
www.bayerbecker.com
6900 Tylersville Rd., Suite "A"
Mason, OH 45040 - 513.336.6600

Drawing:	RP03059
Drawn by:	B.B.
Checked By:	J.O.L.
Issue Date:	04/26/10
Sheet:	1/2

THIS DOCUMENT AND ALL RELATED DETAIL DRAWINGS, SPECIFICATIONS, AND ELECTRONIC MEDIA PREPARED OR FURNISHED BY BAYER BECKER (BB), ARE INSTRUMENTS OF BB'S PROFESSIONAL SERVICE, AND IS THE EXCLUSIVE PROPERTY OF BB. NO DISCLOSURE, USE, REPRODUCTION, OR DUPLICATION IN WHOLE, OR IN PART, MAY BE MADE WITHOUT WRITTEN PERMISSION OF BB, AND IS DONE SO AT USER'S SOLE RISK. COPYRIGHT - ALL RIGHTS RESERVED.

Plot time: May 17, 2010 - 1:48pm
Drawing name: J:\2003\03059\RP03059.dwg - Layout Tab: Sheet 1

OR 8378 PG 1952

Image ID: 000007954346 Type: OFF
Page 2 of 2
File# 2011-00042367
BK 8378 PG 1952

I hereby state to the best of my knowledge, information and belief that the accompanying plat is the correct return of a survey made under my direction for "PALOMINO ESTATES", monuments will be set and the subdivision Ordinance No. 122-87 of the City of Fairfield, Butler County, Ohio has been complied with to the best of my knowledge.

5-19-10
Jeffrey O. Lambert, P.S.
Registered Surveyor #7568 in Ohio

STATE OF OHIO
JEFFREY O. LAMBERT 7568 REGISTERED PROFESSIONAL SURVEYOR

LEGEND

- *Proposed Spike*
- *Proposed Mag Nail*
- *Proposed 1" Iron Pin*
- *Proposed 5/8" Iron Pin*
- *Found 1/2" Iron Pin*
- *Found 5/8" Iron Pin*
- *Found 2"X2" Concrete Monument*
- *E. Easement*
- *Dr.E. Drainage Easement*
- *B.L. Building line*
- *U.&Dr.E. Utility and Drainage Easement*
- *U.E. Utility Easement*
- *100 YR.DR.RT. 100 Year Drainage Route*
- *M.O.E. Minimum Opening Elevation*
- *M.F.O.E. Minimum Front Opening Elevation*
- *M.R.O.E. Minimum Rear Opening Elevation*

NOTES:

TOTAL CENTERLINE LENGTH FOR PALOMINO COURT = 600.00 L.F.
TOTAL CENTERLINE LENGTH FOR McCORMICK LANE = 265.73 L.F.

TOTAL AREA OF LOTS = 8.860 ACRES
TOTAL RIGHT-OF-WAY TO BE DEDICATED = 1.007 ACRES
TOTAL AREA OF SUBDIVISION = 9.867 ACRES

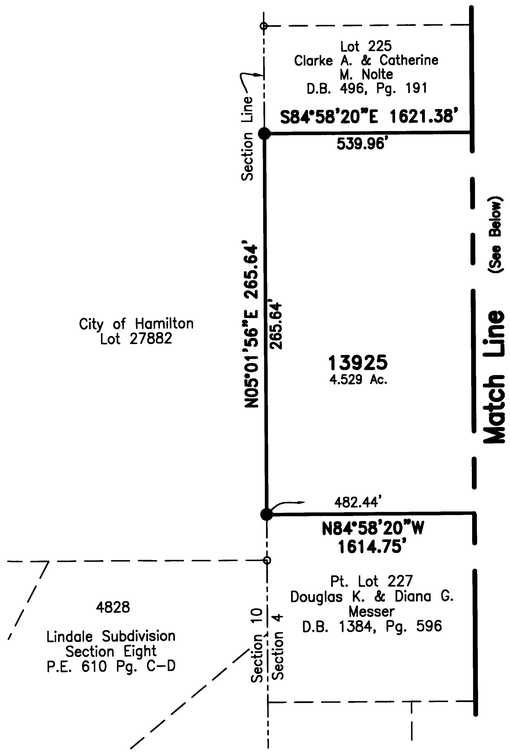

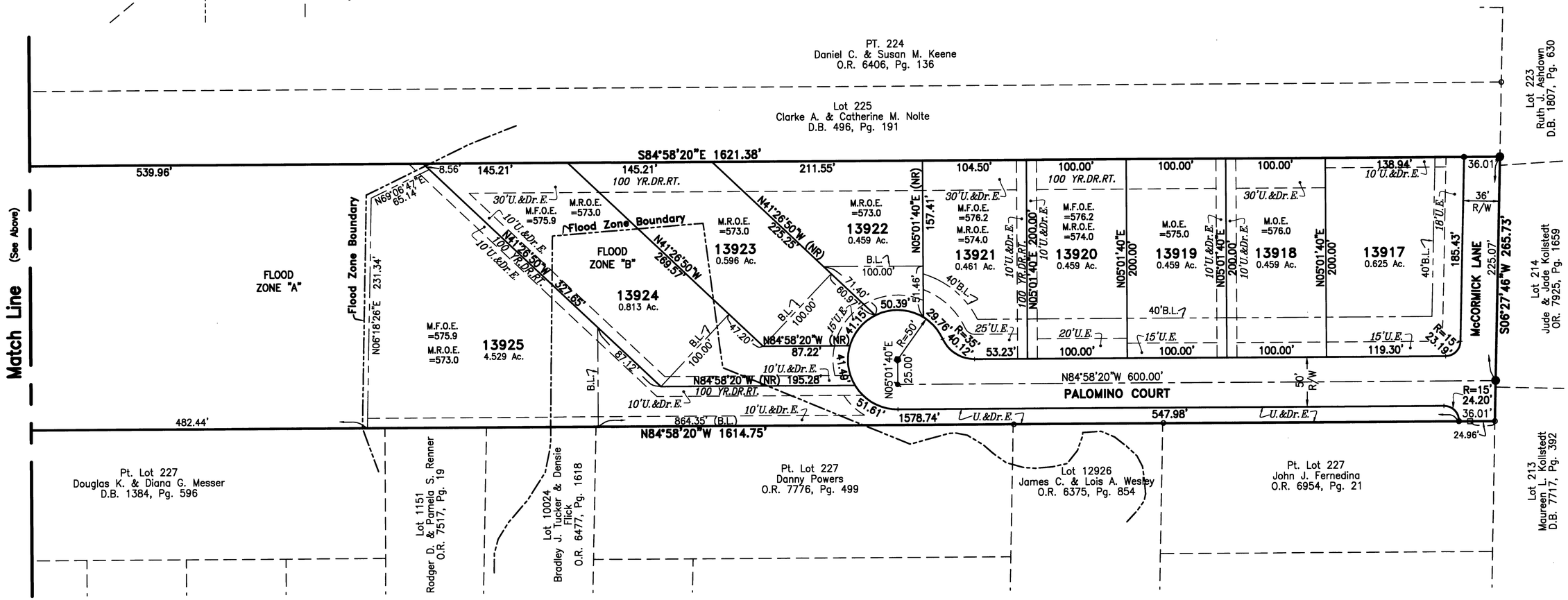

THIS DOCUMENT AND ALL RELATED DETAIL DRAWINGS, SPECIFICATIONS, AND ELECTRONIC MEDIA PREPARED OR FURNISHED BY BAYER BECKER (BB) ARE INSTRUMENTS OF BB'S PROFESSIONAL SERVICE, AND IS THE EXCLUSIVE PROPERTY OF BB. NO DISCLOSURE, USE, REPRODUCTION, OR DUPLICATION IN WHOLE, OR IN PART, MAY BE MADE WITHOUT WRITTEN PERMISSION OF BB, AND IS DONE SO AT USER'S SOLE RISK. COPYRIGHT – ALL RIGHTS RESERVED.

Item	Revision Description	Date	Drwn:	Chk:

SCALE 1" = 50'
0 50' 100'

PALOMINO ESTATES
PART LOT #226 AND LOT #226
SECTION 4, TOWN 1, RANGE 2
CITY OF FAIRFIELD
BUTLER COUNTY, OHIO
RECORD PLAT

bayer becker
engineers • architects • planners
landscape architects • surveyors
www.bayerbecker.com
6900 Tylersville Rd., Suite "A"
Mason, OH 45040 - 513.336.6600

Drawing:	RP03059
Drawn by:	B.B.
Checked By:	J.O.L.
Issue Date:	04/26/10
Sheet:	2/2

Plot time: May 17, 2010 – 1:47pm
Drawing name: J:\2003\03059\RP03059.dwg – Layout Tab: Sheet 2

ORDINANCE NO. _____

ORDINANCE TO AUTHORIZE THE RELEASE OF THE MAINTENANCE BOND AND ACCEPT THE PUBLIC IMPROVEMENTS FOR PALOMINO ESTATES SUBDIVISION.

BE IT ORDAINED by the Council of the City of Fairfield, Ohio, that:

Section 1. The maintenance bond for Palomino Estates subdivision is hereby released and the City Manager is hereby authorized to take the necessary steps to cancel the same.

Section 2. The Council of the City of Fairfield, Ohio does by this ordinance accept the public improvements for Palomino Estates subdivision.

Section 3. This ordinance shall take effect at the earliest period allowed by law.

Passed _____ _____
Mayor's Approval

Posted _____

First Reading _____ Rules Suspended _____

Second Reading _____

Third Reading _____

ATTEST:

_____
Clerk of Council

This is to certify that this Ordinance has been duly published by posting and summary publication as provided by Charter.

_____
Clerk of Council

Active Clients\City of Fairfield\Ordinances\2020\Palomino Estates-Ord

Attachment: Palomino Estates-Ord [Revision 1] (1598 : Palomino Estates (Palomino Court) Public Acceptance)

City Council Ordinance
Regular Meeting - September 28, 2020

Submitted by: Erin Lynn,
Submitting Department: Development Services

Subject:
2021 Community Development Block Grant

Legislation Title:
Ordinance to authorize the City Manager to execute the FY 2021 Community Development Block Grant (CDBG) application and agreement with Butler County, Ohio.

Recommendation:
It is recommended that City Council authorize the City Manager to execute the FY 2021 Community Development Block Grant application, which is due to Butler County by November 6, 2020.

Background/Synopsis:
A sidewalk is proposed adjacent to the Fairfield Public Works Department facility along both Holden Boulevard and North Gilmore Road. The purpose of this project is to provide a safe walking route for students attending the freshman and high schools. Currently students walk either along the roadway shoulder or in the grass. The proposed sidewalk will end at the entrances to the freshman and high schools. In the opposite direction the sidewalk will connect to an existing sidewalk to the south on Holden Boulevard, which continues across Route 4 and into a large residential neighborhood.

The Community Development Block Grant (CDBG) is a source of funding to support areas that are designated as Low to Moderate Income (LMI) such as the area surrounding the schools. The proposed sidewalk meets the national objective of benefitting a low to moderate income neighborhood.

This project also supports one of the goals established in the Fairfield Forward Comprehensive Plan: "Provide for safe non-motorized routes to schools and other activity centers."

Financial Impact:
The requested grant allocation is for $125,000, which 10% of the estimated amount of funding Butler County is expected to receive from the U.S. Department of Housing and Urban Development (HUD). The CDBG Cooperation Agreement between the City of Fairfield and Butler County entitles the City to no less than 10% of the CDBG funds the County receives in that program year.

Emergency Provision Explanation:
NA

Rule Suspension Requested:
No

Emergency Provision Needed:
No

Attachments:
1. CDBG map
2. CDBG-Ord

2021 CDBG Project A

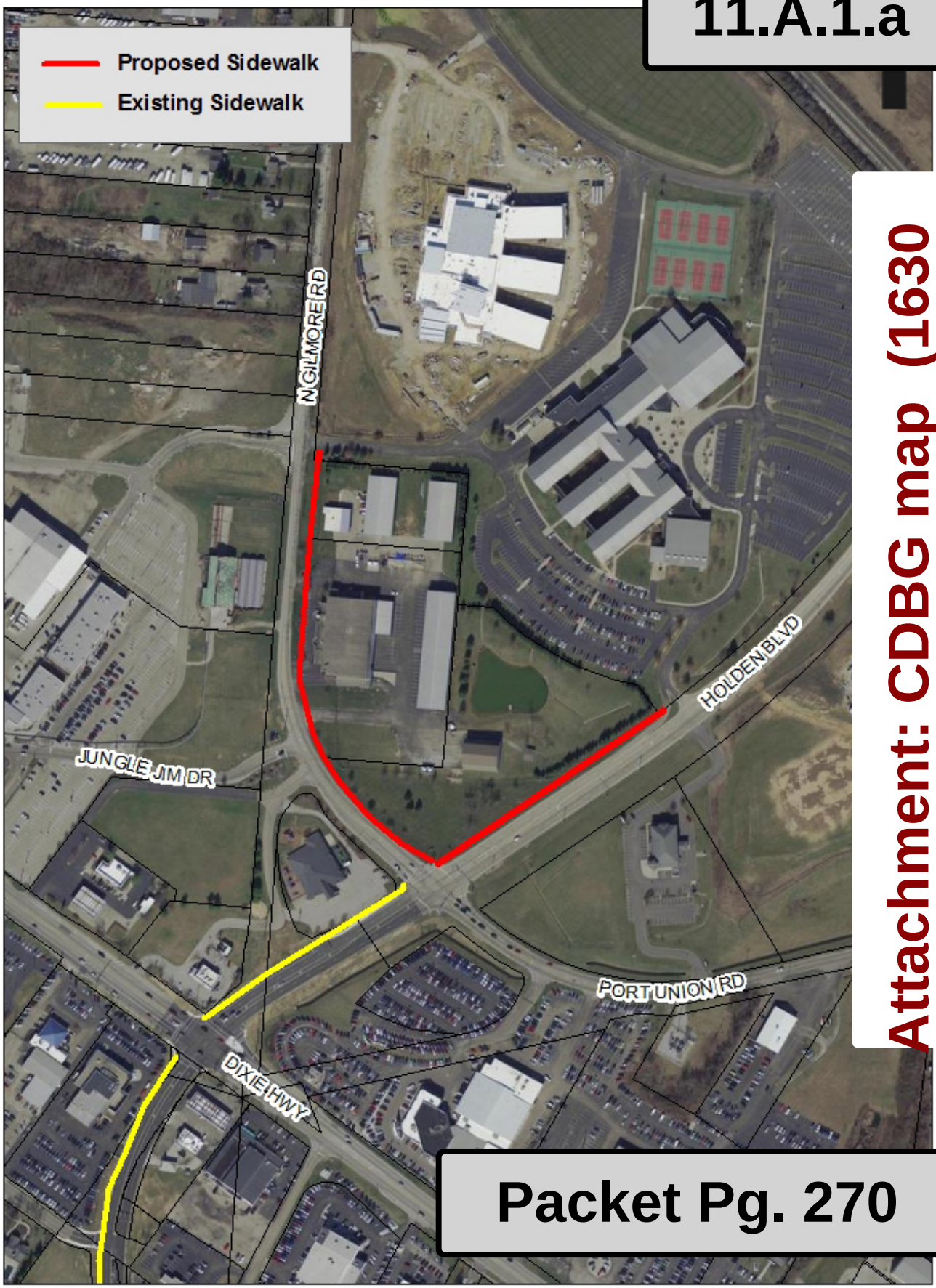

Attachment: CDBG map (1630

ORDINANCE NO. _____

ORDINANCE TO AUTHORIZE THE CITY MANAGER TO EXECUTE THE FY 2021 COMMUNITY DEVELOPMENT BLOCK GRANT (CDBG) APPLICATION AND AGREEMENT WITH BUTLER COUNTY, OHIO.

BE IT ORDAINED by the Council of the City of Fairfield, Ohio, that:

Section 1. The City Manager is hereby authorized to execute the FY 2021 Community Development Block Grant (CDBG) application and agreement with Butler County, Ohio in accordance with the application and agreement on file in the office of the City Manager.

Section 2. This Ordinance shall take effect at the earliest period allowed by law.

Passed _____ _____
Mayor's Approval

Posted _____

First Reading _____ Rules Suspended _____

Second Reading _____

Third Reading _____

ATTEST:

_____
Clerk of Council

This is to certify that this Ordinance has been duly published by posting and summary publication as provided by Charter.

_____
Clerk of Council

Active Clients\City of Fairfield\Ordinances\2020\CDBG-Ord

Attachment: CDBG-Ord (1630 : 2021 Community Development Block Grant)

City Council Ordinance
Regular Meeting - September 28, 2020

Submitted by: John Clemmons,
Submitting Department: Legal

Subject:
Agreement with Butler County Public Defender Commission and Butler County Board of Commissioners
Legislation Title:
Ordinance to authorize the City Manager to execute an agreement for indigent legal representation for 2021 in the Fairfield Municipal Court with the Butler County Public Defender Commission/Butler County Board of Commissioners.

Recommendation:
It is recommended that Council adopt an ordinance to authorize the City Manager to execute the agreement for indigent legal representation for 2021 in the Fairfield Municipal Court with the Butler County Public Defender Commission/Butler County Board of Commissioners.

Background/Synopsis:
The City previously provided legal representation for indigent defendants from its own funds by appointment of attorneys on a case-by-case basis. This new system which was started in 2011 has reduced the overall cost of indigent defense as stated above.
The Butler County Public Defender Commission/Butler County Board of Commissioners will provide legal representation for all indigent defendants by providing at least four (4) public defenders including both felony and misdemeanor representation and state statute and City ordinance violations.

Financial Impact:
The Fairfield Municipal Court has estimated an annual savings of at least $65,000.00 from the implementation of this agreement.

Emergency Provision Explanation:
Rules suspension only is requested so that the agreement can be in place and reimbursement by the State of Ohio can be obtained in accordance with state guidelines.

Rule Suspension Requested:
Yes

Emergency Provision Needed:
Yes

Attachments:
1. Butler County Public Defender-Ord

ORDINANCE NO. _____

ORDINANCE TO AUTHORIZE THE CITY MANAGER TO EXECUTE AN AGREEMENT FOR INDIGENT LEGAL REPRESENTATION FOR 2021 IN THE FAIRFIELD MUNICIPAL COURT WITH THE BUTLER COUNTY PUBLIC DEFENDER COMMISSION/BUTLER COUNTY BOARD OF COMMISSIONERS.

BE IT ORDAINED by the Council of the City of Fairfield, Ohio, that:

Section 1. The City Manager is hereby authorized to execute an agreement with the Butler County Public Defender Commission/Butler County Board of Commissioners for indigent legal representation in the Fairfield Municipal Court for 2021 in accordance with the agreement on file in the office of the City Manager.

Section 2. This Ordinance shall take effect at the earliest period allowed by law.

Passed _____ _____
Mayor's Approval

Posted _____

First Reading _____ Rules Suspended _____

Second Reading _____

Third Reading _____

ATTEST:

_____
Clerk of Council

This is to certify that this Ordinance has been duly published by posting and summary publication as provided by Charter.

_____
Clerk of Council

Active Clients\City of Fairfield\Ordinances\2020\Butler County Public Defender-Ord

Attachment: Butler County Public Defender-Ord (1636 : Agreement with Butler County Public Defender Commission and Butler County Board

City Council Ordinance
Regular Meeting - September 28, 2020

Submitted by: Ben Mann,
Submitting Department: Public Works

Subject:
Adoption of Fairfield Connects - Citywide Active Transportation Plan

Legislation Title:
Ordinance to approve and adopt the Fairfield Connects-Citywide Active Transportation Plan as part of the City of Fairfield, Ohio Comprehensive Plan.

Recommendation:
It is recommended that the City Council has a first reading of the ordinance to adopt the Fairfield Connects Plan at the September 28th meeting and hold the second reading until a recommendation from the Planning Commission is made at their October 14th meeting.

Background/Synopsis:

The City consultant, MKSK, along with staff from both the Public Works Department and the Development Department along with the City Manager's Office participated in the Fairfield Connects project. Fairfield Connects included public involvement, a planning process, planning level documents and cost estimates for an active transportation plan that focuses on sidewalk and multi-use path interconnectivity. It is a citywide plan focusing on centers of activity and points of interest. The final product is designed to work in conjunction with the "Fairfield Forward" comprehensive plan update which was adopted on December 2, 2019.

The project was scheduled in the Capital Improvement Program for 2019. It was a cumulative effort of a nearly year-long process to develop a companion piece to Fairfield Forward that focused on connectivity for walking, running, and biking.

During the public outreach component of the comprehensive plan update, sidewalk and trail connectivity were major themes repeated at every community engagement event. Residents stated they want pedestrian connections to activity centers such as parks and the town center, between neighborhoods, and to the Great Miami River Trail.

Additional public outreach was performed with Fairfield Connects that included a survey that had wide participation, public meetings, and the utilization of a steering committee.

A low resolution copy of the plan is attached. A high resolution copy of the plan is available in the Council office.

Financial Impact:

None at this time.

Emergency Provision Explanation:

None requested.

Rule Suspension Requested:
No

Emergency Provision Needed:
No

Attachments:
1. 2020 Fairfield Connects Final Report - Low resolution
2. Fairfield Connects-Ord

FAIRFIELD CONNECTS

CONNECTIVITY MASTER PLAN

FAIRFIELD OHIO MKSK

Attachment: 2020 Fairfield Connects Final Report - Low resolution (1627 : Adoption of Fairfield Connects - Citywide Active Transportation Plan)

INTRODUCTION

Why Create the Fairfield Connects Plan?

The Fairfield Connects Connectivity Master Plan was developed as a response to the input and concerns of community residents and stakeholders made evident during the Fairfield Forward Comprehensive Plan process. During that process, as the community developed goals and objectives for the plan and as they assessed priorities for the plan's recommendations, improved connectivity for bicyclists and pedestrians quickly rose to the top. Thus, it became a focal point for the City of Fairfield to develop the Fairfield Connects Plan to better respond in a more detailed effort to the concerns of the citizens. Relevant goals from the comprehensive plan include: developing safe pedestrian routes along Route 4, ensuring walkability within the Town Center area, designing pedestrian and bicycle facilities along major corridors, and improving pedestrian and bicycle mobility for day-to-day and commuter activity.

The City of Fairfield solicited a consulting team to assist in the development of a connectivity master plan for the city. This plan was developed to be a guiding document for the city as it moves forward towards improving overall connectivity within the community. The Fairfield Connects Plan will assist city leadership and staff as they gather and procure resources to implement a vision for a connected city.

Acknowledgments

The city wishes to thank the following people for this collaborative effort between the community, the steering committee, elected officials, city staff, and the consulting team.

Mayor + City Council
Steve Miller, Mayor
Bill Woeste, Vice Mayor
Tim Abbott
Leslie Besl
Chad Oberson
Dale Paullus
Mark Scharringhausen
Terry Senger

City Staff
Mark Wendling, City Manager
Dan Wendt, Assistant City Manager
Greg Kathman, Development Services Director
Tiphanie Howard, Parks and Recreation Director
Erin Lynn, Planning Manager
Ben Mann, Public Works Director
Nick Dill, Acting City Engineer

Steering Committee
Roseanna Hale
Melissa Hays
Jason Jones
Jim Klosterman
Joe Penney
Gwen Ritchie
David Sheehan
Bill Westerbeck

Consultants
MKSK
LJB, Inc.

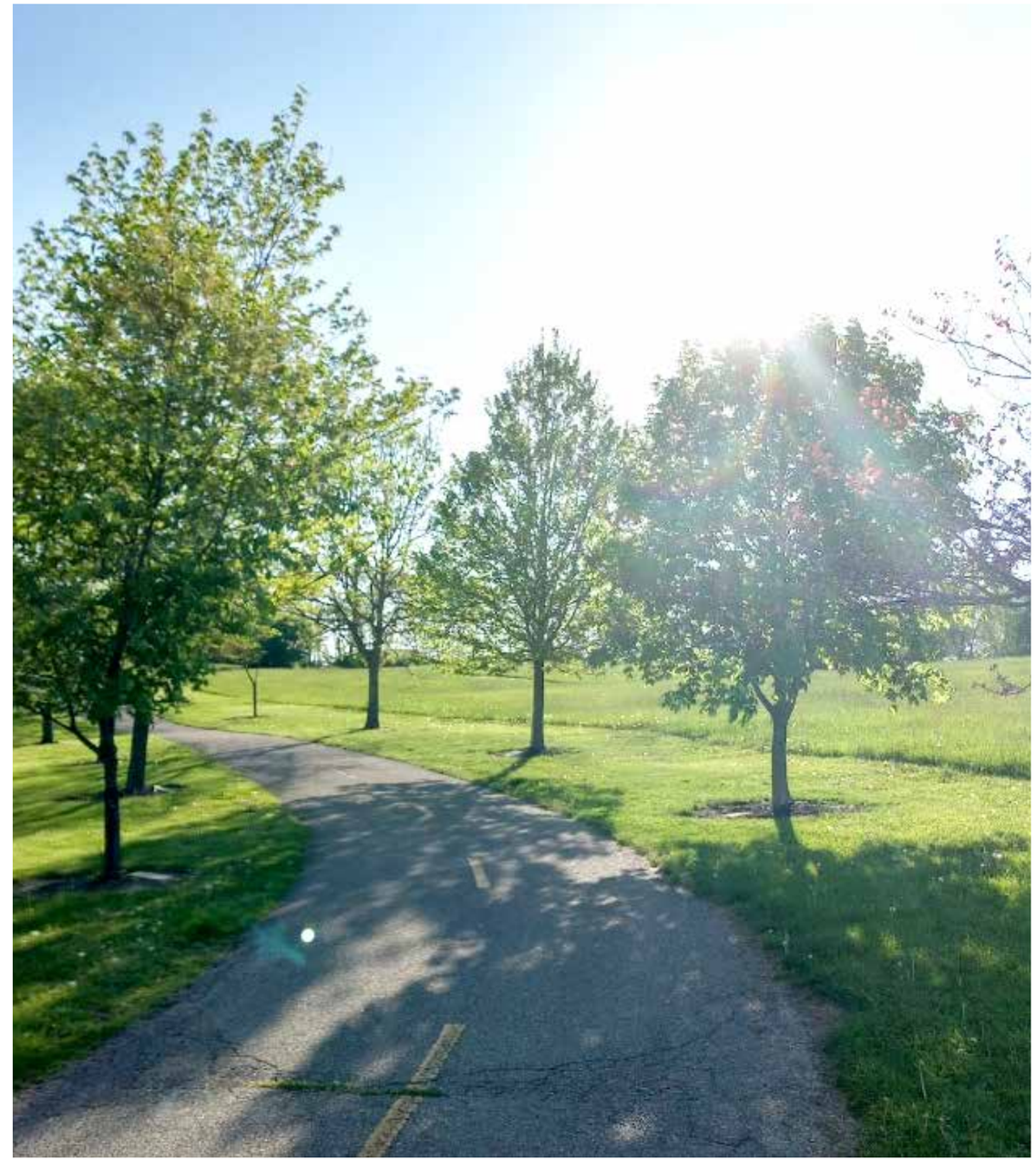

Pathway in Harbin Park

TABLE OF CONTENTS

SECTION 1: EXECUTIVE SUMMARY 1
EXECUTIVE SUMMARY 2
GOALS OF THE PLAN 3
EXISTING CONNECTIVITY NETWORK 4
COMPREHENSIVE CONNECTIVITY PLAN 5

SECTION 2: ENGAGEMENT SUMMARY 6
ENGAGEMENT PROCESS 7
SURVEY RESULTS 8

SECTION 3: CONNECTIVITY PLAN 10
FACILITY TYPES 11
SAFETY MECHANISMS FOR CONNECTIVITY..... 13
EXISTING CONNECTIVITY NETWORK 14
COMPREHENSIVE CONNECTIVITY PLAN 15
MAJOR ROUTE DETAILS 16

SECTION 4: IMPLEMENTATION STRATEGY 33
SUMMARY OF IMPLEMENTATION STRATEGY 34
IMPLEMENTATION FRAMEWORK TABLE 36
FUNDING SOURCES & STRATEGY 39

1 EXECUTIVE SUMMARY

EXECUTIVE SUMMARY
GOALS OF THE PLAN
EXISTING CONNECTIVITY NETWORK
COMPREHENSIVE CONNECTIVITY PLAN

HARBIN PARK

Attachment: 2020 Fairfield Connects Final Report - Low resolution (1627 : Adoption of Fairfield Connects - Citywide Active Transportation Plan)

EXECUTIVE SUMMARY

Purpose of this Plan

The Fairfield Connects Plan focused on macro-level routing strategies that would develop stronger linkages between neighborhoods, schools, and other community destinations such as the Town Center, parks, and commercial destinations. As part of this effort, the project team (consisting of City of Fairfield staff, MKSK, and LJB Inc.) conducted an analysis of existing conditions within the community, explored best practices and common facility types that could help to improve active transportation connectivity, and determined which corridors and connections would make desirable routes linking key areas within Fairfield.

Process

Development of the Fairfield Connects Plan began in September of 2019 and lasted through Summer of 2020. The project team engaged with the public using different techniques, including receiving 1,148 responses to our online survey. The process included a project steering committee and city leadership to ensure considerable feedback was received on the plan as it was developed. More information on the engagement process can be found in Section 2 of this plan.

Facility Types

Based on prior experience of the project team, regional and national best practices, the project team focused on four different facility types to improve connectivity in Fairfield. These included multi-use paths, sidewalks, shared lanes, and bicycle lanes. These facilities proved most effective at fitting into the context and physical setting of the city and are facility typologies that have been previously funded by regional and state entities. More information on these facility types can be found in Section 3 of this plan.

Major Routes

As the connectivity plan was developed, the project team referred to community input to help determine the major destinations and corridors that needed primary focus. While this plan includes recommended improvements to smaller gaps in the connectivity network (small sidewalk gaps), most of the plan focuses on developing major connectivity routes throughout the community that integrate the prominent locations, neighborhoods, and destinations of Fairfield. The major routes are shown below. More detailed information can be found in Section 3 of this plan.

Community Destinations

1. Grange Park
2. Waterworks Park
3. Thomas O Marsh Park
4. Village Green Park
   - Community Arts Center
   - Lane Public Library
5. William Harbin Park
6. Huffman Park
7. Gilmore Ponds Preserve Metropark
8. Fairfield Stadium
9. Fairfield Senior High School
10. Gilbert Farms Park

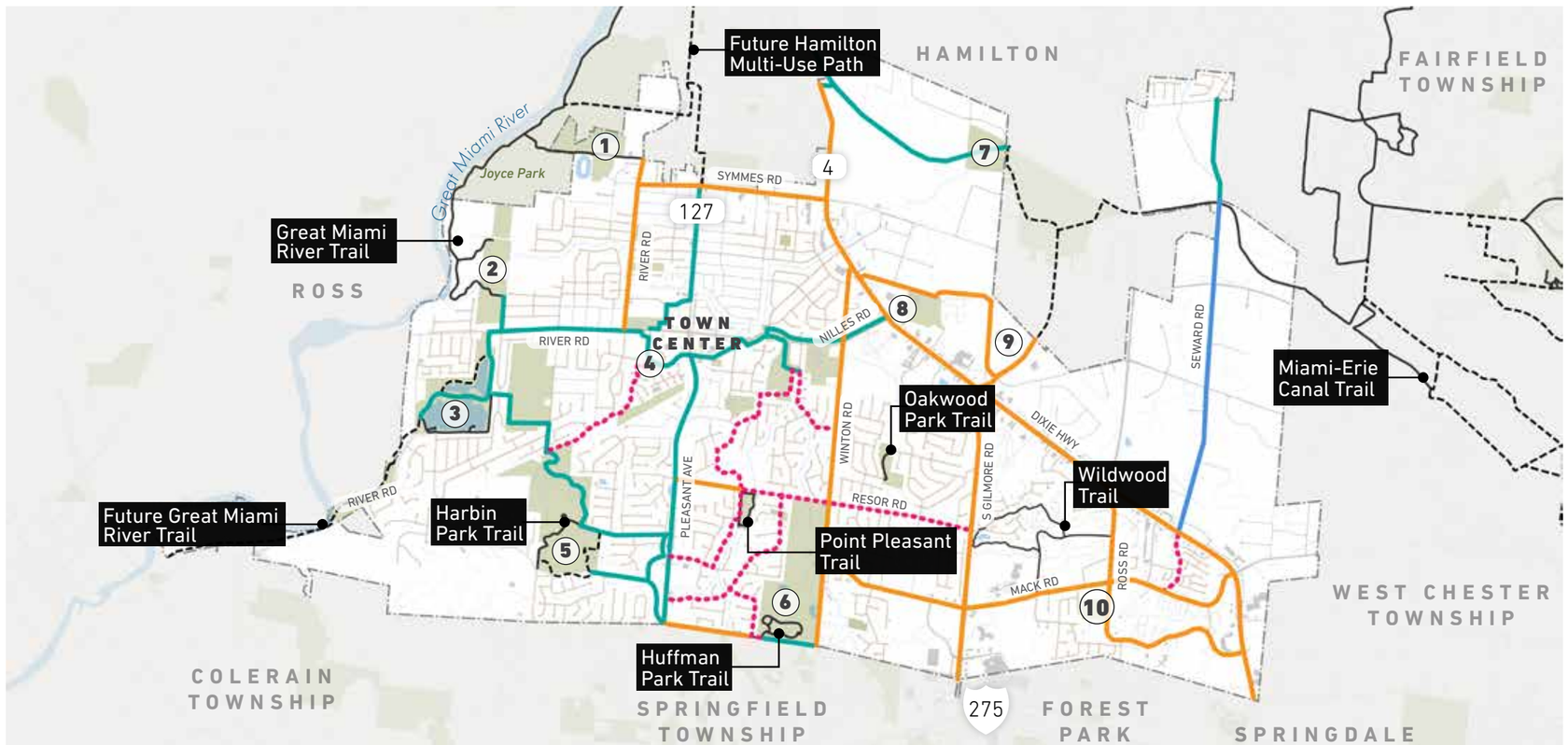

Attachment: 2020 Fairfield Connects Final Report - Low resolution (1627 : Adoption of Fairfield Connects - Citywide Active Transportation Plan)

GOALS OF THE PLAN

The goals of this plan are to improve connectivity for non-motorized travel between various places in and near the City of Fairfield. This plan describes the importance and benefits of improved connections using sidewalks, crossings, trails, pathways and other opportunities to make it more inviting, convenient and safe to walk or bicycle. Expected results from these investments, based on case studies from similar cities, include: an improved quality of life, higher property values, increased business activity, fewer vehicle emissions, fewer and less severe pedestrian/bicycle injuries, improved health outcomes for residents of all ages including those with physical impairments, and a potential reduction in vehicle congestion. The overall goals of the plan are illustrated below.

CONNECT TO PARKS

CONNECT TO TOWN CENTER

CONNECT TO EXISTING TRAILS

CONNECT NEIGHBORHOODS

CONNECT TO MAJOR DESTINATIONS

IMPROVE PUBLIC HEALTH

EXISTING CONNECTIVITY NETWORK

One of the initial tasks of the plan was to take an inventory of the existing connectivity network within Fairfield. The map below shows the existing connectivity options in Fairfield and how they relate to parks and prominent community destinations. Previously planned trails (from other studies and regional organizations) within or with a potential to impact the City of Fairfield were also reviewed. Currently, the city is lacking a comprehensive trail network. The trails that do exist are mostly isolated to individual parks and do not connect multiple areas within the city. Sidewalk connectivity covers most of the community. However, gaps exist that prevent the city from being truly walkable. The Great Miami River Trail and the Miami to Miami Trail are also noted on here because they offer connections to other communities and promote future economic development opportunities for Fairfield.

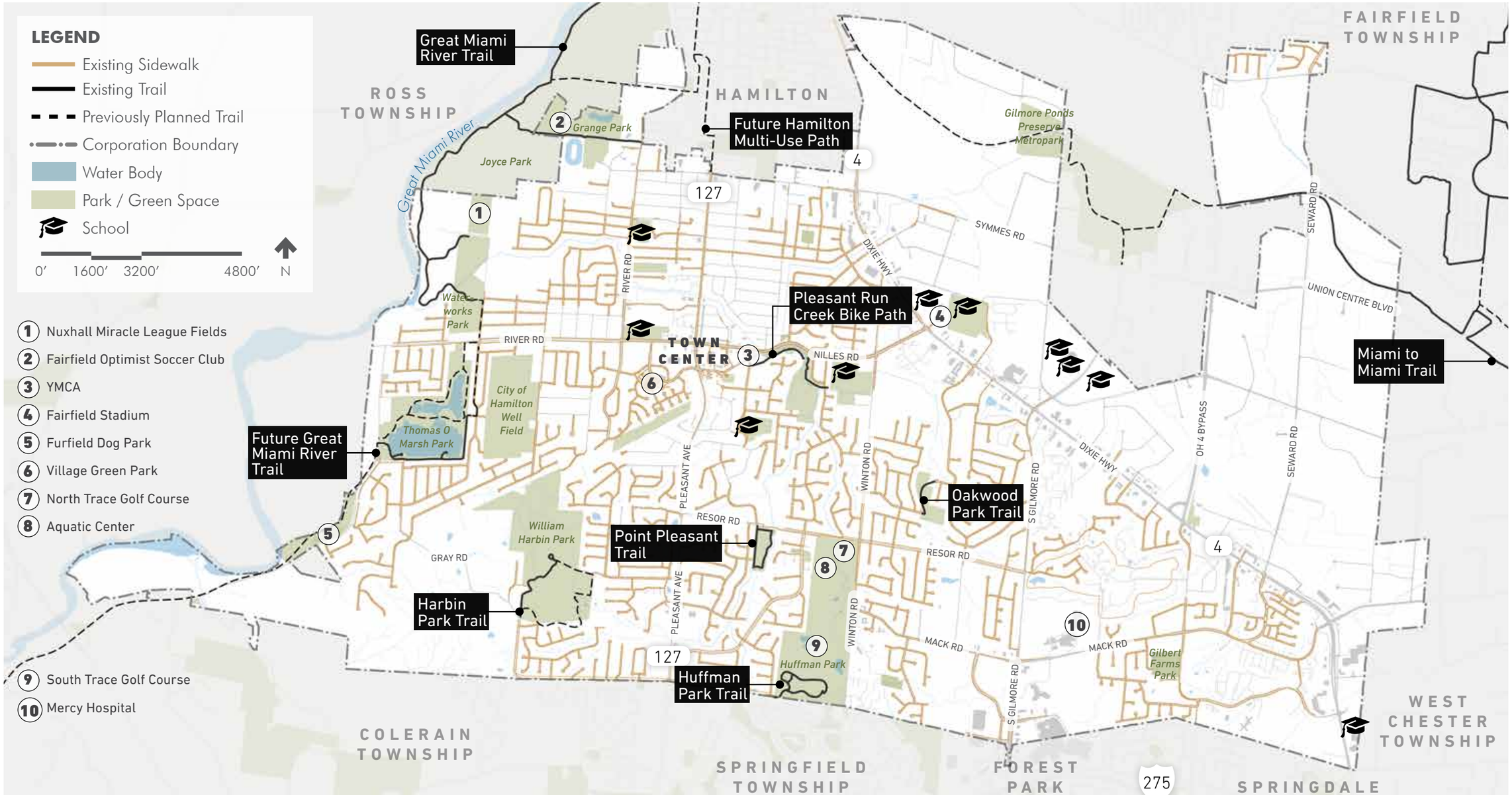

COMPREHENSIVE CONNECTIVITY PLAN

The map below depicts the primary routes of the connectivity plan. This map shows that the primary facility type is for each route, however, each route may contain multiple facility types in order to make the connection work. The goal of this routing is to promote better connectivity between the Town Center, neighborhoods, parks, schools, shopping areas, and regional trails. More details on the specific routes can be found in Section 3 of this document where individual examinations of the primary routes are provided.

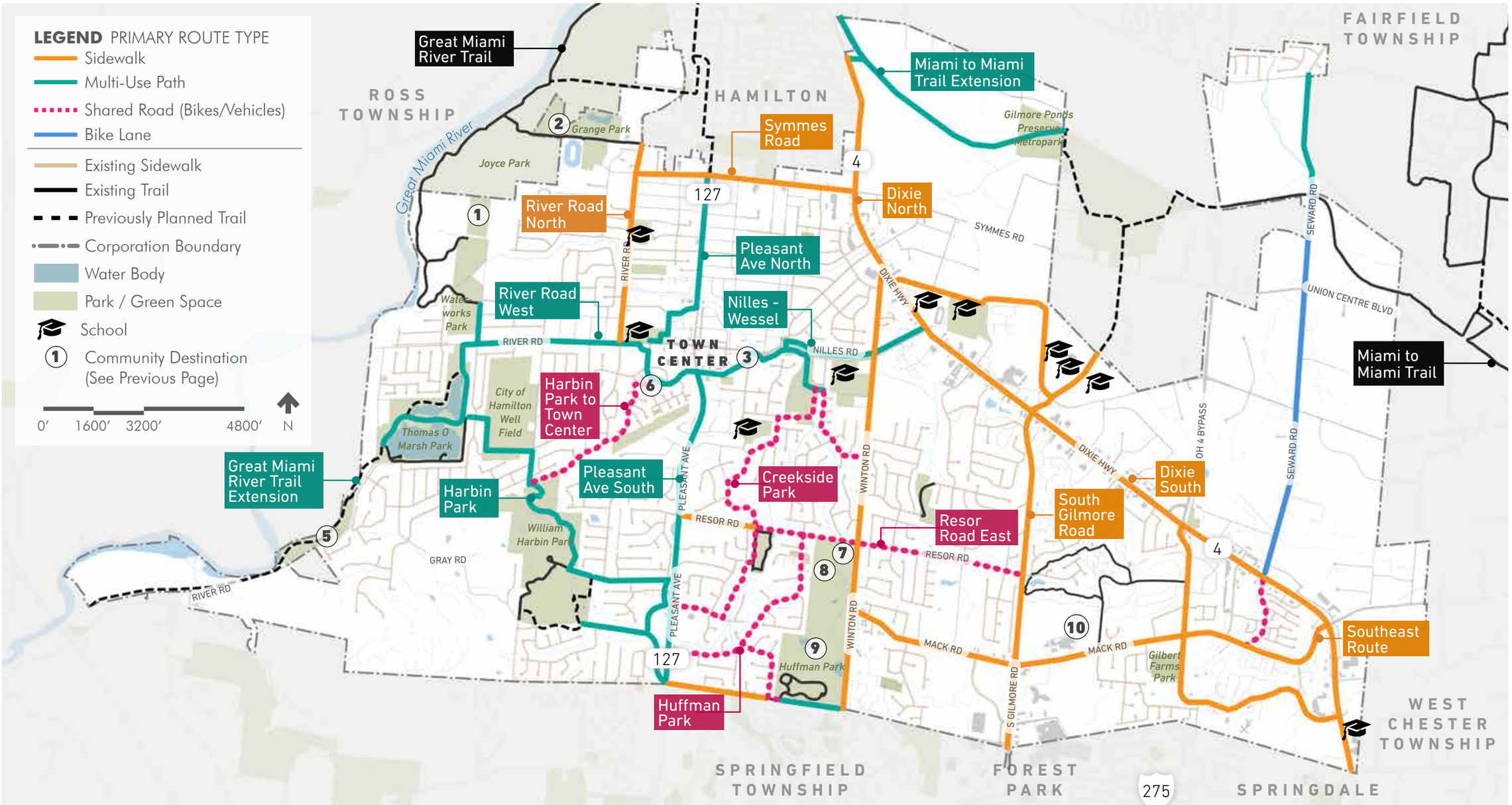

2 ENGAGEMENT RESULTS

ENGAGEMENT PROCESS

SURVEY RESULTS

PUBLIC OPEN HOUSE | 03.03.2020

Attachment: 2020 Fairfield Connects Final Report - Low resolution (1627 : Adoption of Fairfield Connects - Citywide Active Transportation Plan)

ENGAGEMENT PROCESS

Community Engagement Process

Community input for this plan was gathered during the Fairfield Forward planning process. This plan focused on a specific topic, connectivity, and the project team facilitated public engagement efforts soley on this topic. Community and stakeholder engagement occurred throughout the plan's development. The project team gathered initial thoughts on prominent connections, met with community stakeholders and leaders to assess goals, solicited feedback on specific connectivity questions, and conducted a review with the public of the major routes and facility types selected.

Techniques

Initial Engagement:
City of Fairfield staff attended two community events, the Farm-R-Treat, and the opening of the Furfield Dog Park to gather input from community residents. The engagement centered on asking citizens simply where they lived, where they'd like to have improved connectivity to, and how they get there (the routing). This confirmed for the project team what the major destinations were for city residents and where the primary routing should be located.

Steering Committee:
The steering committee for this project included representatives from multiple city departments and leadership, as well as representatives from key community stakeholder groups such as residents, workers, and schools. The committee convened multiple times throughout this process and provided critical input and guidance to the project team as they developed and refined the plan's routing and overall strategy.

City Council:
The City Council not only authorized development of this plan as a response to the feedback from the Fairfield Forward plan, they also provided direction on the plan after draft recommendations were developed. Their feedback focused on ensuring the project team properly developed cost analysis and implementation strategies that would help guide future decision making.

General Public:
The general public was eager to provide feedback and guidance to the project team. In addition to well attended local community events that featured the plan, many residents provided input through an on-line survey. The online survey generated almost 1,200 responses and showed general consensus among project goals, facility types, and major route priorities. A more advanced routing plan was showcased at a public open house on March 3rd, 2020 for review and input.

Online Survey:
The goal of the online survey, which was initiated in the early stages of the process, was to gain feedback and understanding on more detailed topics related to connectivity in Fairfield. It was already understood that connectivity was important to residents. However, the project team wanted to gain more detailed input on how to make it happen in a manner that best suited the community. The survey asked questions related to destinations respondents would like better connectivity to, how they would use the trails and improved connectivity network, and what types of facilities they would feel most comfortable using. Lastly, it asked them to prioritize the major routes that had been identified at that time and offer input on any routes they felt were missing. Some highlights from the survey can be found on the following pages.

Public Works Director Ben Mann presents to the public the intial recommendations of the connectivty plan on March 3rd, 2020.

The steering committee included city staff, residents, and representatives from the Fairfield City School District.

SURVEY RESULTS

Question 1

What areas or places in Fairfield are most important for you to be able to access via walking or bicycling? (check all that apply)

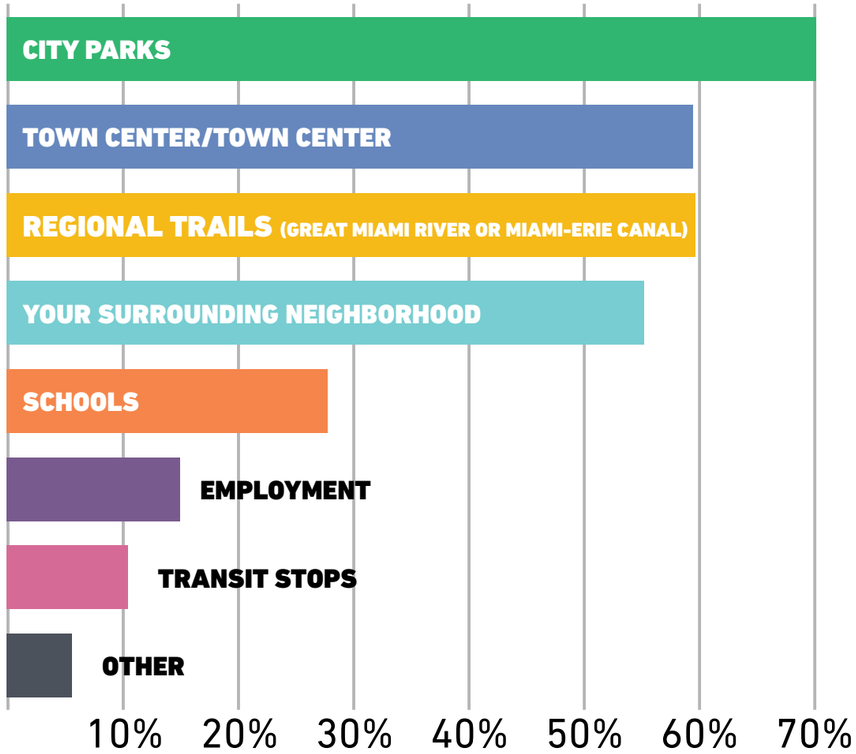

The 'other' responses can be found in the appendix of this document.

Question 2

If it were available, which of the following on-road or off-road pedestrian facilities would you use in Fairfield? (Check all that apply)

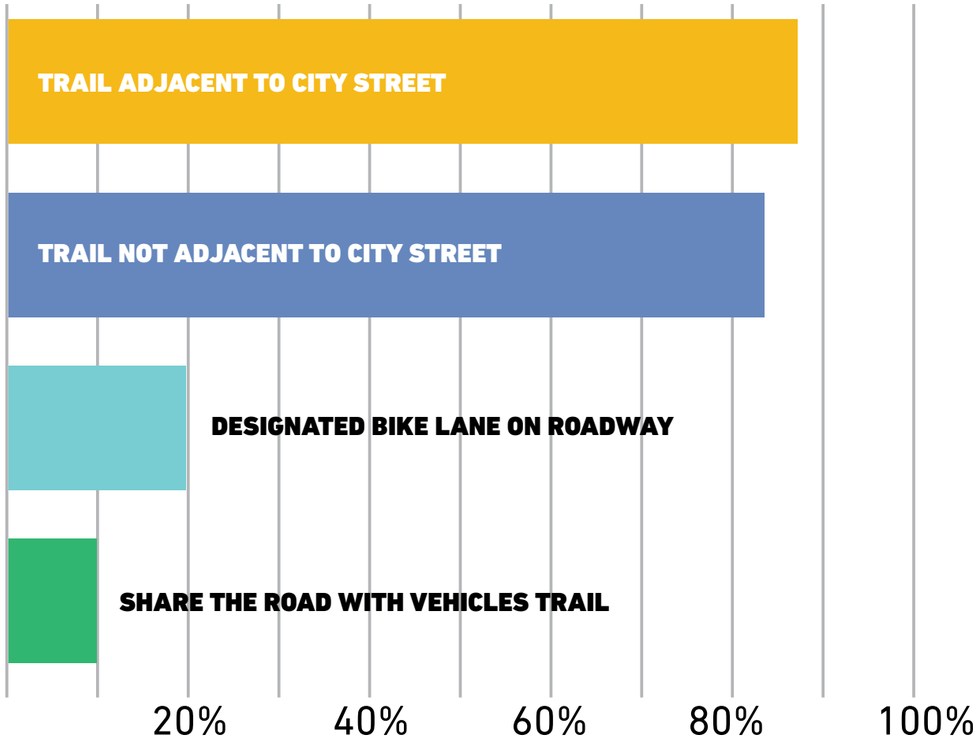

Attachment: 2020 Fairfield Connects Final Report - Low resolution (1627 : Adoption of Fairfield Connects - Citywide Active Transportation Plan)
Packet Pg. 286

SURVEY RESULTS

Question 3

If a complete trail network existed within the City, what types of activities or destinations would you use it for in Fairfield? (Check all that apply)

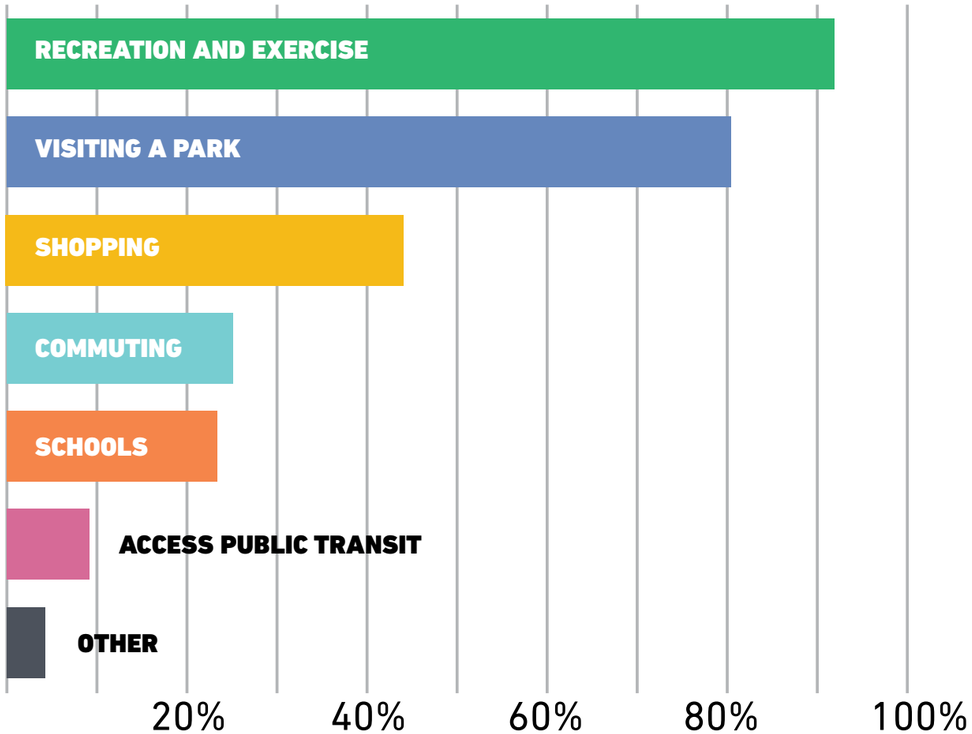

The 'other' responses can be found in the appendix of this document.

Question 4

Referencing the map, rate the overall public benefit of each connectivity option on a scale of 1 to 5. This diagram depicts various connectivity options between neighborhoods and major destinations in Fairfield.

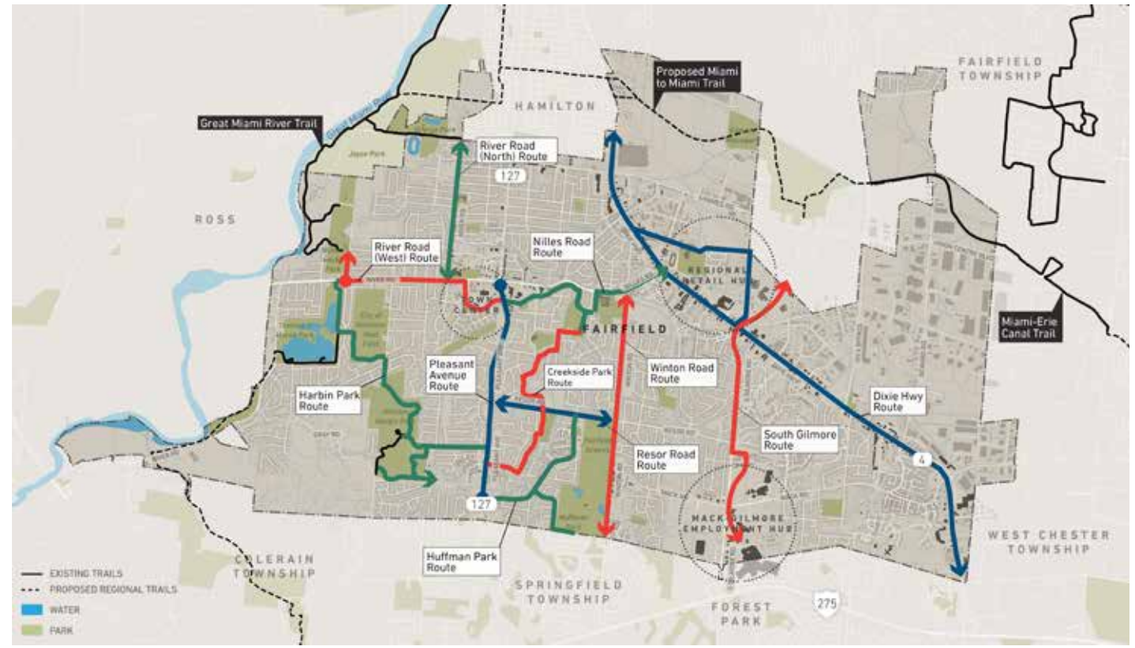

Scoring Results

1.	River Road (West)	3.89
2.	Pleasant Avenue Route	3.84
3.	Harbin Park Route	3.83
4.	Dixie Highway Route	3.79
5.	Nilles Road Route	3.68
6.	River Road (North)	3.64
7.	Resor Road Route	3.40
8.	South Gilmore Route	3.33
9.	Creekside Park Route	3.24
10.	Huffman Park Route	3.17

There were additional resident concerns about lack of connections in the southeastern portion of the city, which prompted the addition of a southeast route as seen in the final connectivity plan.

3 CONNECTIVITY PLAN

FACILITY TYPES
SAFETY MECHANISMS
EXISTING CONNECTIVITY NETWORK
COMPREHENSIVE CONNECTIVITY PLAN
MAJOR ROUTE DETAILS

GREAT MIAMI RIVER TRAIL

Attachment: 2020 Fairfield Connects Final Report - Low resolution (1627 : Adoption of Fairfield Connects - Citywide Active Transportation Plan)

FACILITY TYPES

Based upon best practices from similar cities, and industry standards, different facilities types were evaluated for their applicability. Based upon input from the steering committee and the public, project team experience and knowledge, and a desire to have the plan be simple, four facility types were selected: sidewalks, multi-use paths, bike lanes, and a shared road. These facilities are described in greater detail below.

SIDEWALK

- Dedicated space for pedestrians
- Provides basic connectivity throughout a community
- Minimum of 5 feet wide. In high use zones such as around schools, business districts and near parks, 7-10 feet wide is recommended

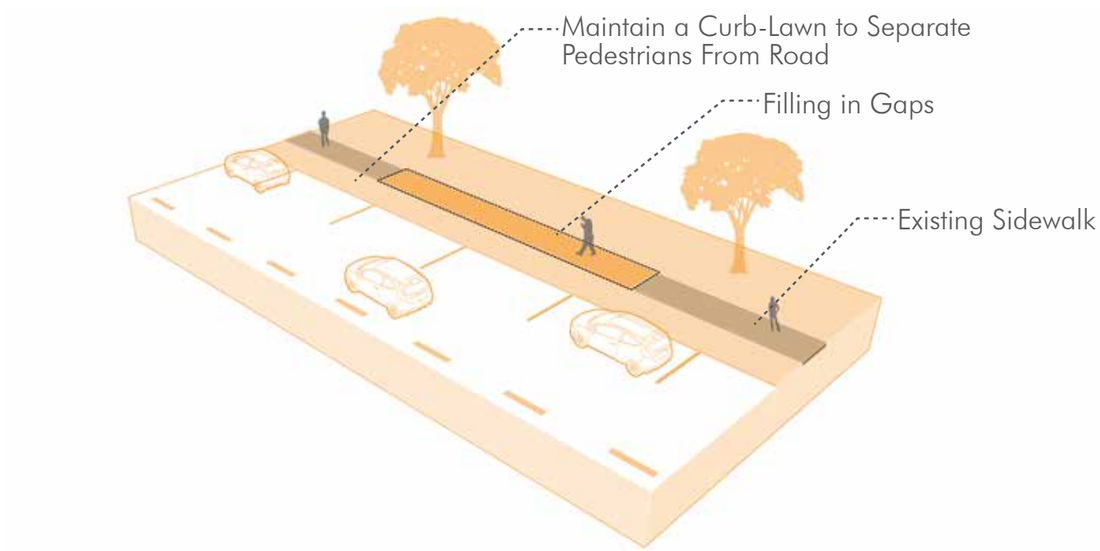

Best Practices:

South Gilmore Road approaching Route 4.

Augusta Boulevard near Pleasant Avenue.

MULTI-USE PATH

- Gives equal priority to bike riders and pedestrians
- Often, in lieu of sidewalk and on road bike facility
- Provides safe separation for non-motorized transportation
- Used adjacent to roads and in park settings
- Two-way movement on one side of road

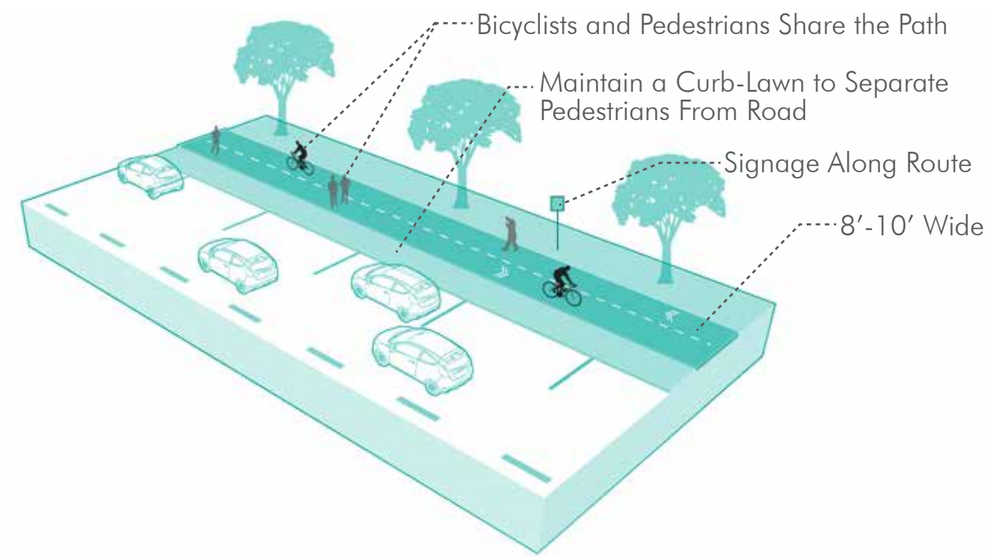

Best Practices:

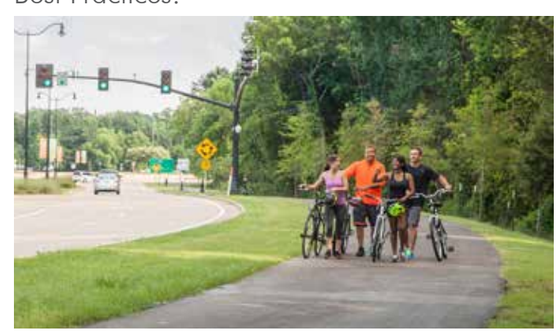

The path is safely separated from the roadway.

Multi-use paths serve bikes and pedestrians alike.

FACILITY TYPES

BIKE LANE

- Creates a dedicated space on road for bikes
- Striping, on-road markers, and physical barriers can be used to keep bicyclists and automobiles separated
- Creates a separate designated space will provide more comfort for riders of different experience levels
- Implemented when there is no space for a multi-use path

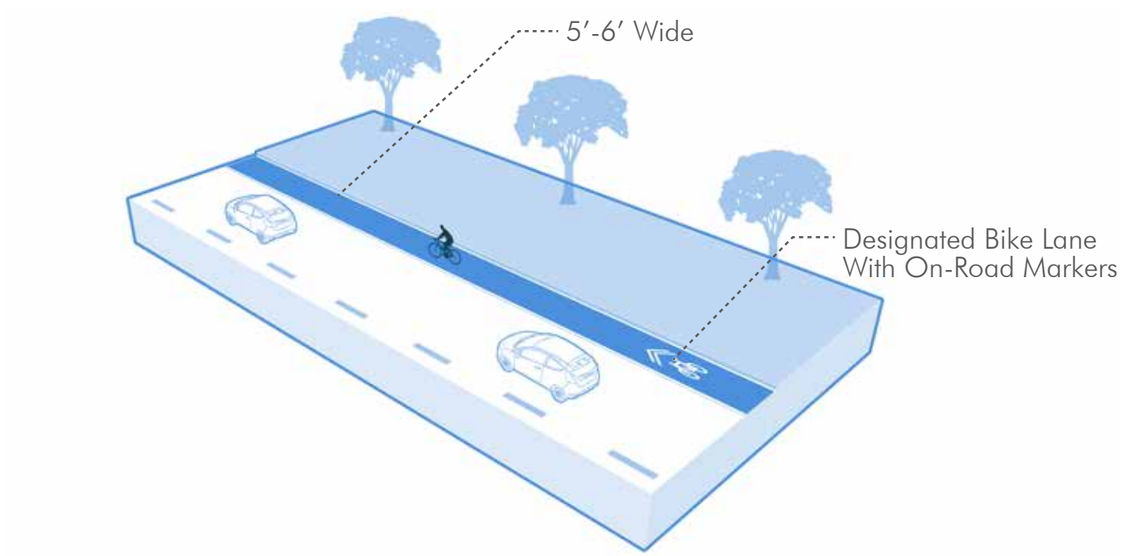

Best Practices:

Bike lane with clear signage and on road marking.

Separation of bicyclists and automobiles is crucial.

SHARED ROAD

- Gives equal priority to bike riders and motorists
- Does not remove parking or travel lanes
- Applied to streets with low traffic volumes and low speeds
- Traffic calming measure
- Designated routes identified with on-road markers and signage
- Keeps on street parking, where it exists already

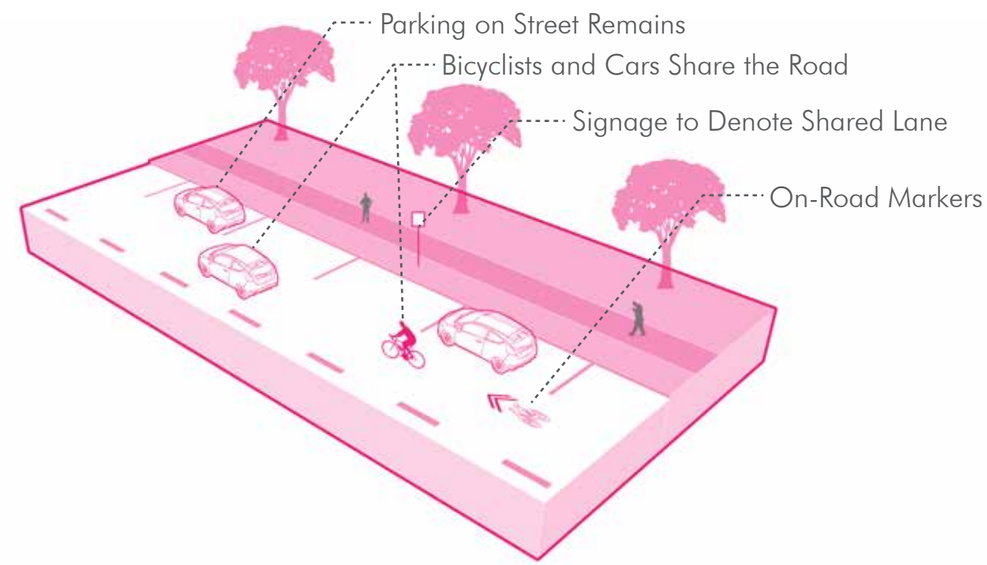

Best Practices:

On road markings need to be clear.

Low volume streets make this ideal for families.

SAFETY MECHANISMS

Other tools, listed below, will be helpful for implementing the vision set out in this Connectivity Plan. These tools will help in creating better safety for all users and increasing an understanding of the connectivity network through signage. These tools should be implemented in conjunction with the construction of new facilities to ensure that each route is operating correctly from day one.

Signalized Crossings

- Creates a safe space for crossing roadways for pedestrians and bicyclists.
- Most needed on busier streets or ones with less than desirable visibility.

Signage

- Informs users of direction and distance to destinations.
- Makes it clear to motorists to be aware of other modes of transportation in use on this route.

Rapid Flashing Beacons

- Lower cost solution for pedestrian and bicycle crossings.
- Allows for mid-block crossings, if needed.
- Increases visibility for crossing and encourages yielding behavior by drivers.

Crosswalks

- Lower cost solution for pedestrian crossings.
- Increases visibility for crossing and encourages yielding behavior by drivers.
- For major crossings, different materials or colors may be used.

Attachment: 2020 Fairfield Connects Final Report - Low resolution (1627 : Adoption of Fairfield Connects - Citywide Active Transportation Plan)

EXISTING CONNECTIVITY NETWORK

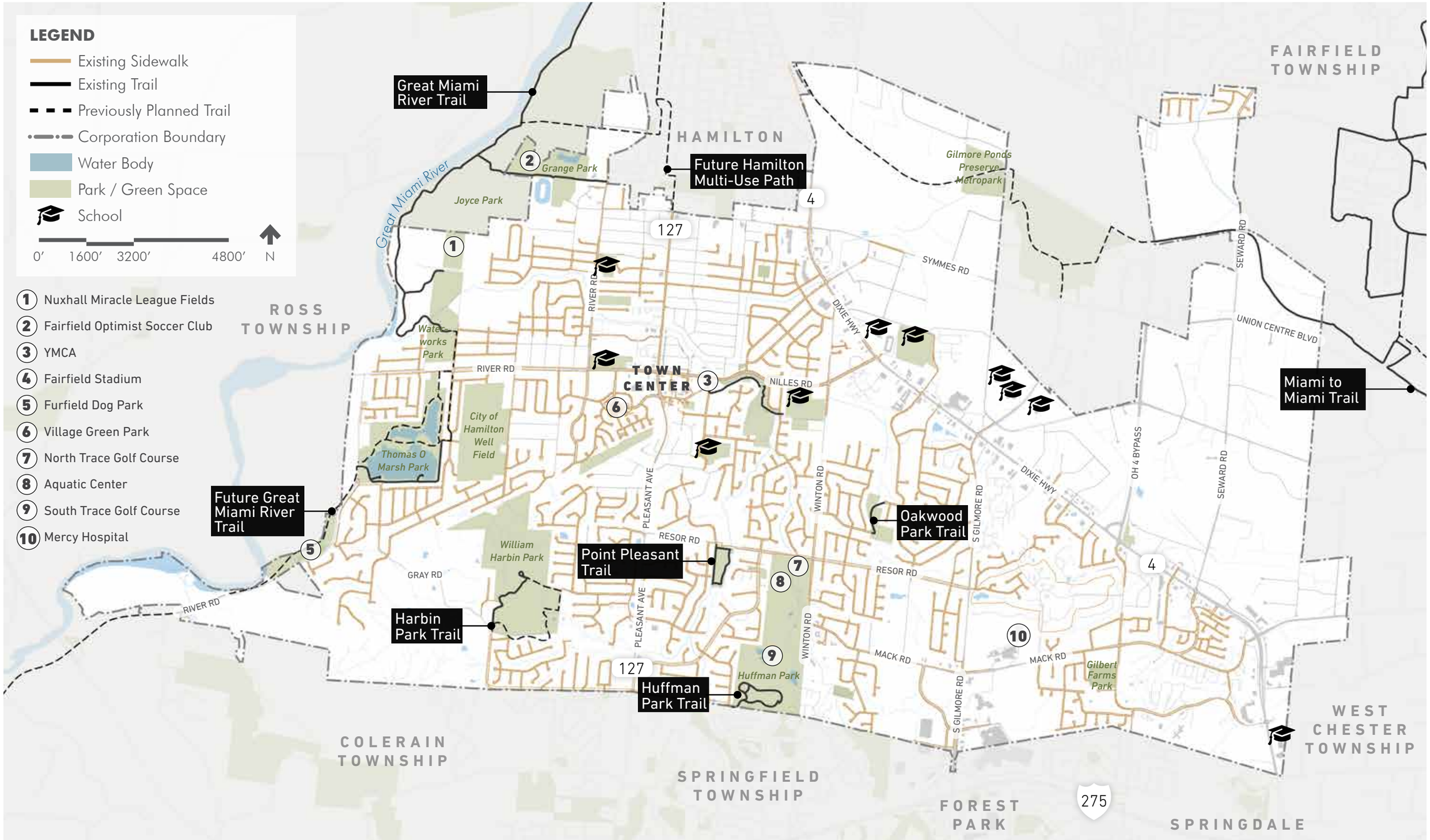

COMPREHENSIVE CONNECTIVITY PLAN

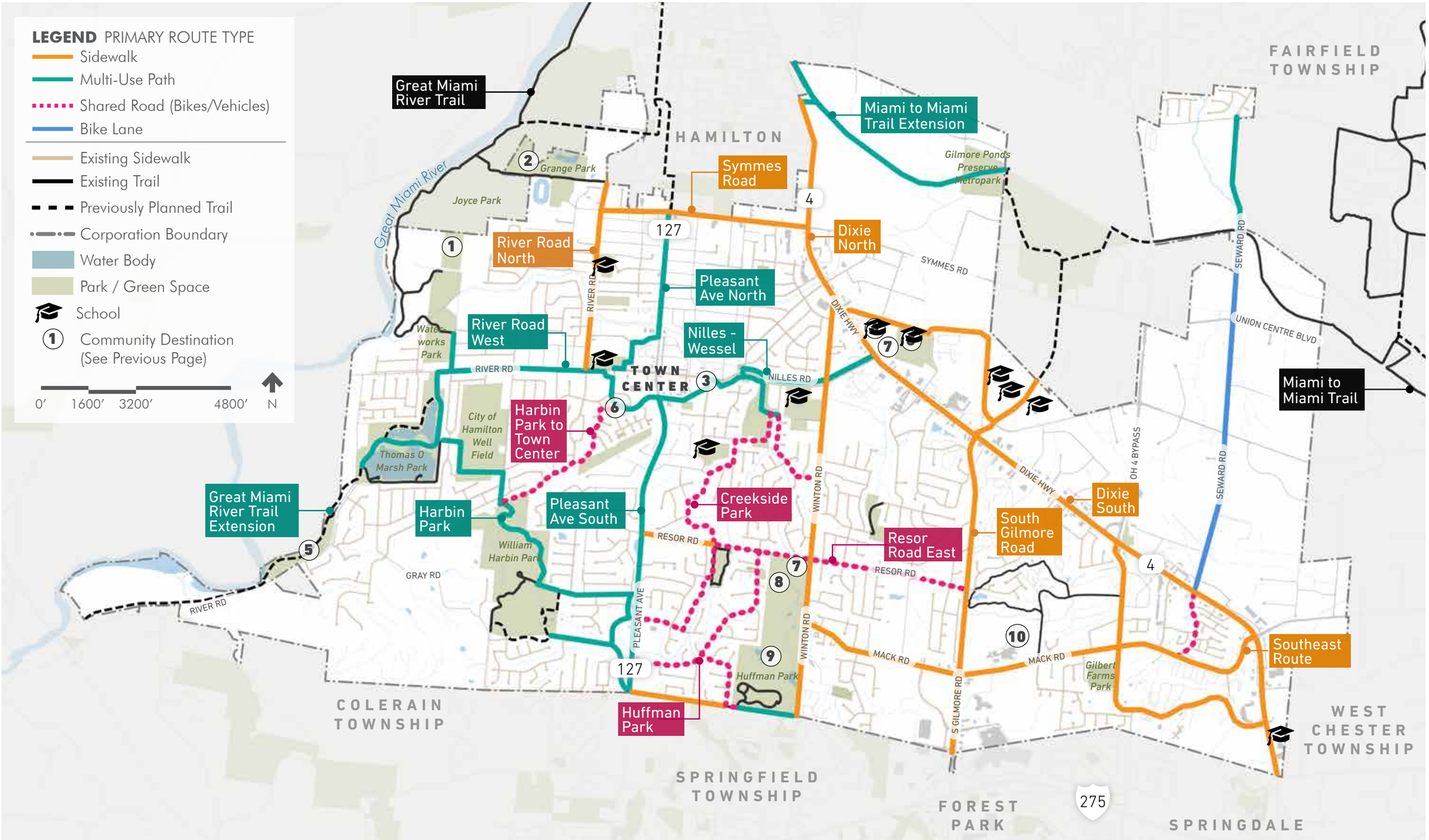

Attachment: 2020 Fairfield Connects Final Report - Low resolution (1627 : Adoption of Fairfield Connects - Citywide Active Transportation Plan)

MAJOR ROUTES

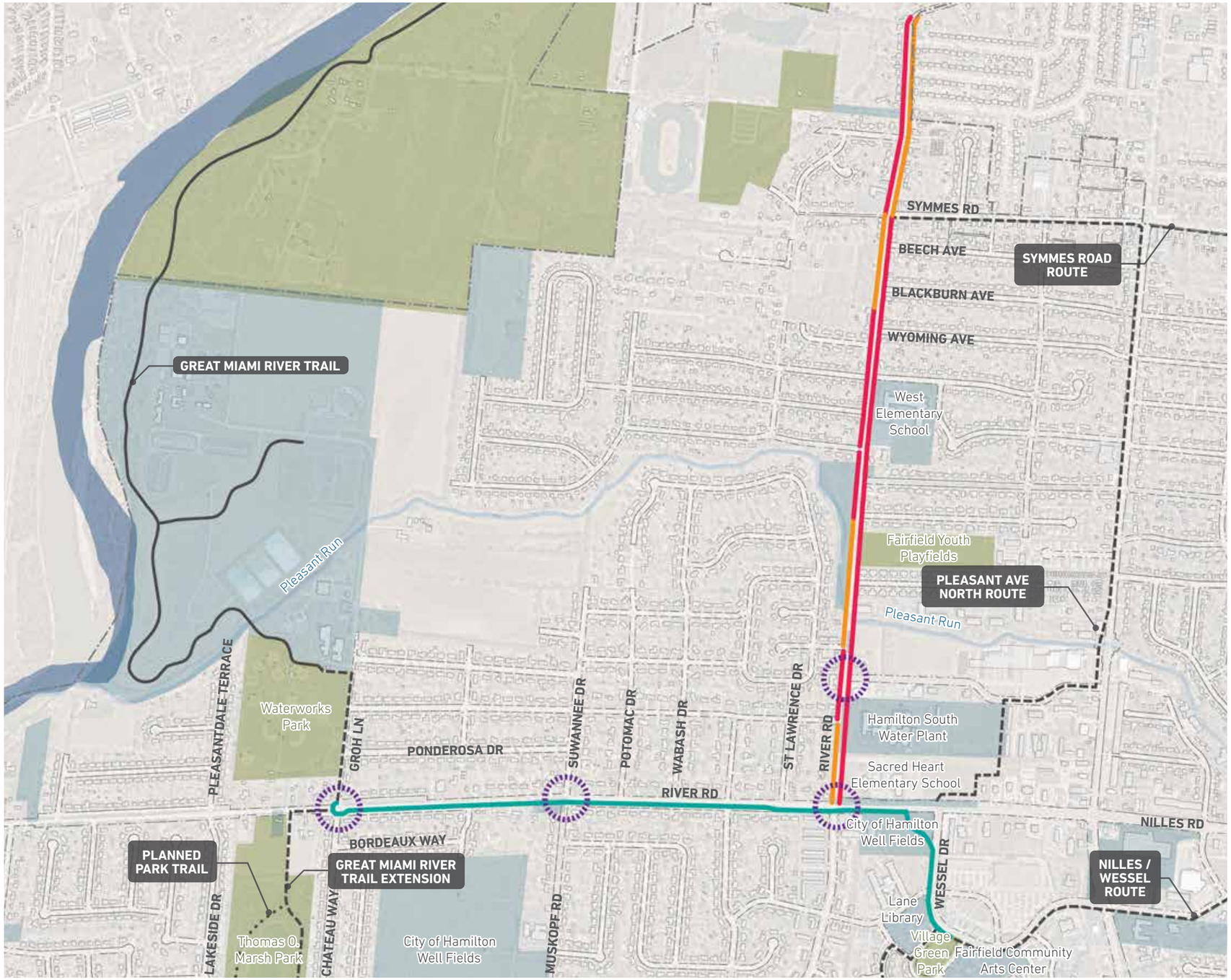

RIVER ROAD WEST AND RIVER ROAD NORTH

Facility Type:

River Road West: Multi-Use Path
River Road North: Sidewalk

Notes (River Road West)

- Route serves as primary connection from Great Miami River Trail into the center of Fairfield.
- Brings riders from Great Miami regional trail into Town Center area, promoting tourism and economic development.
- Due to its integration into the regional trail network, this route should be off-road as much as possible in order to attract a diverse ridership.

Notes (River Road North)

- Filling in the sidewalk gaps along this road provides enhanced connectivity to local schools and neighborhoods.

LEGEND

- Proposed Multi-Use Path
- Proposed Sidewalk
- Existing Sidewalk
- Existing Multi-Use Path
- Planned Park Trail
- Other Major Route
- Signalized Crossing
- Publicly-Owned Parcel
- Park / Green Space

0′ 500′ 1000′ 2000′ N

Attachment: 2020 Fairfield Connects Final Report - Low resolution (1627 : Adoption of Fairfield Connects - Citywide Active Transportation Plan)

MAJOR ROUTES

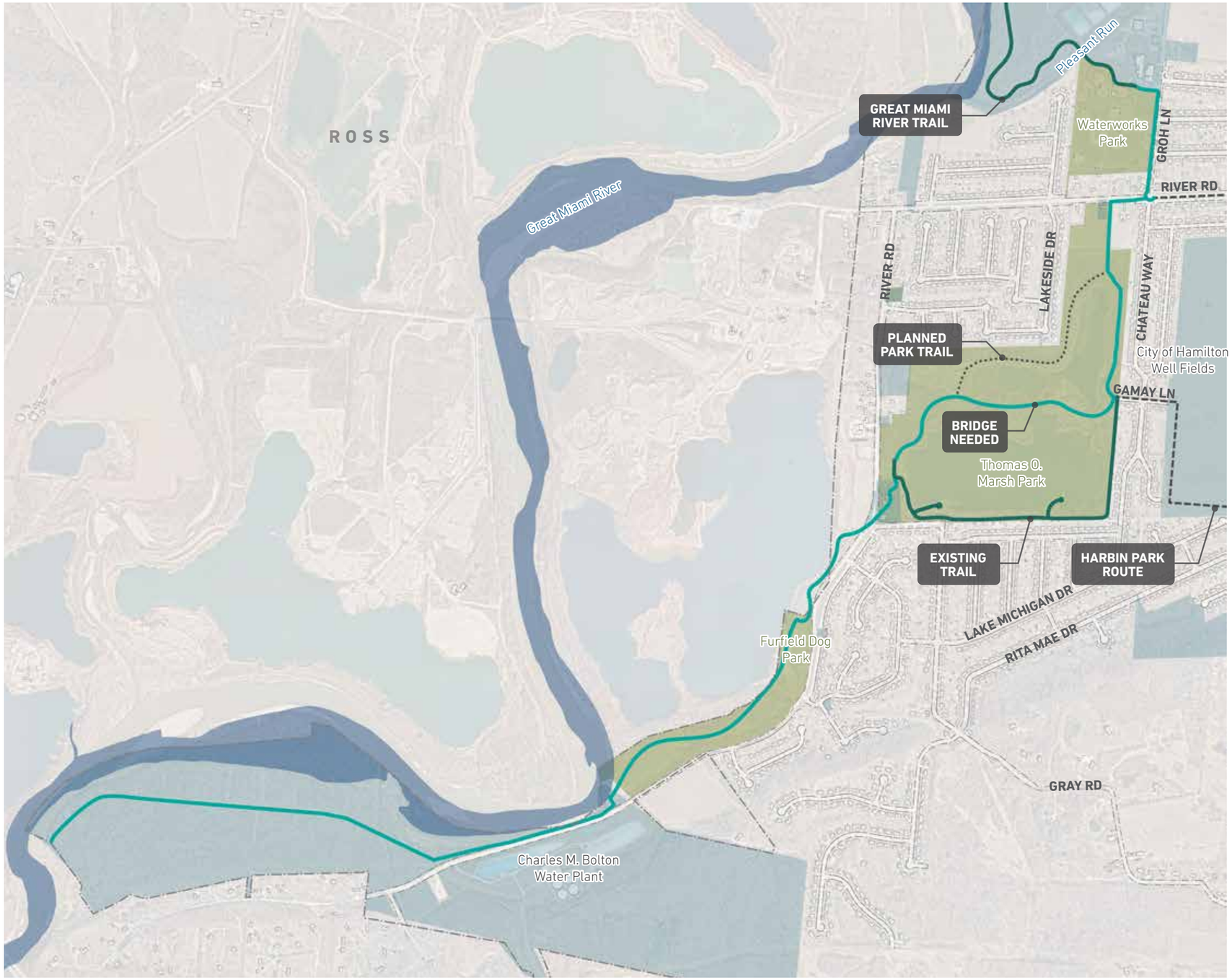

GREAT MIAMI RIVER TRAIL EXTENSION

Facility Type:

Multi-Use Path

Notes

- This route focuses on the Great Miami River Trail (GMRT) as it aligns through the City of Fairfield.
- This highlights the part of the larger GMRT that the City of Fairfield will be spearheading through implementation.
- This will be a multi-use path to keep consistency with the majority of the regional GMRT.
- The Groh Lane segment may be built as part of GMRT or as part of River Road West. For the purposes of this plan, it is included with GMRT funding.
- Exact route layout at the southern end to be coordinated with Hamilton County and GCWW.

LEGEND

- Proposed Multi-Use Path
- Existing Multi-Use Path
- Planned Park Trail
- Other Major Route
- Signalized Crossing
- Publicly-Owned Parcel
- Park / Green Space

0′ 250′ 500′ 1000′ N

Attachment: 2020 Fairfield Connects Final Report - Low resolution (1627 : Adoption of Fairfield Connects - Citywide Active Transportation Plan)

MAJOR ROUTES

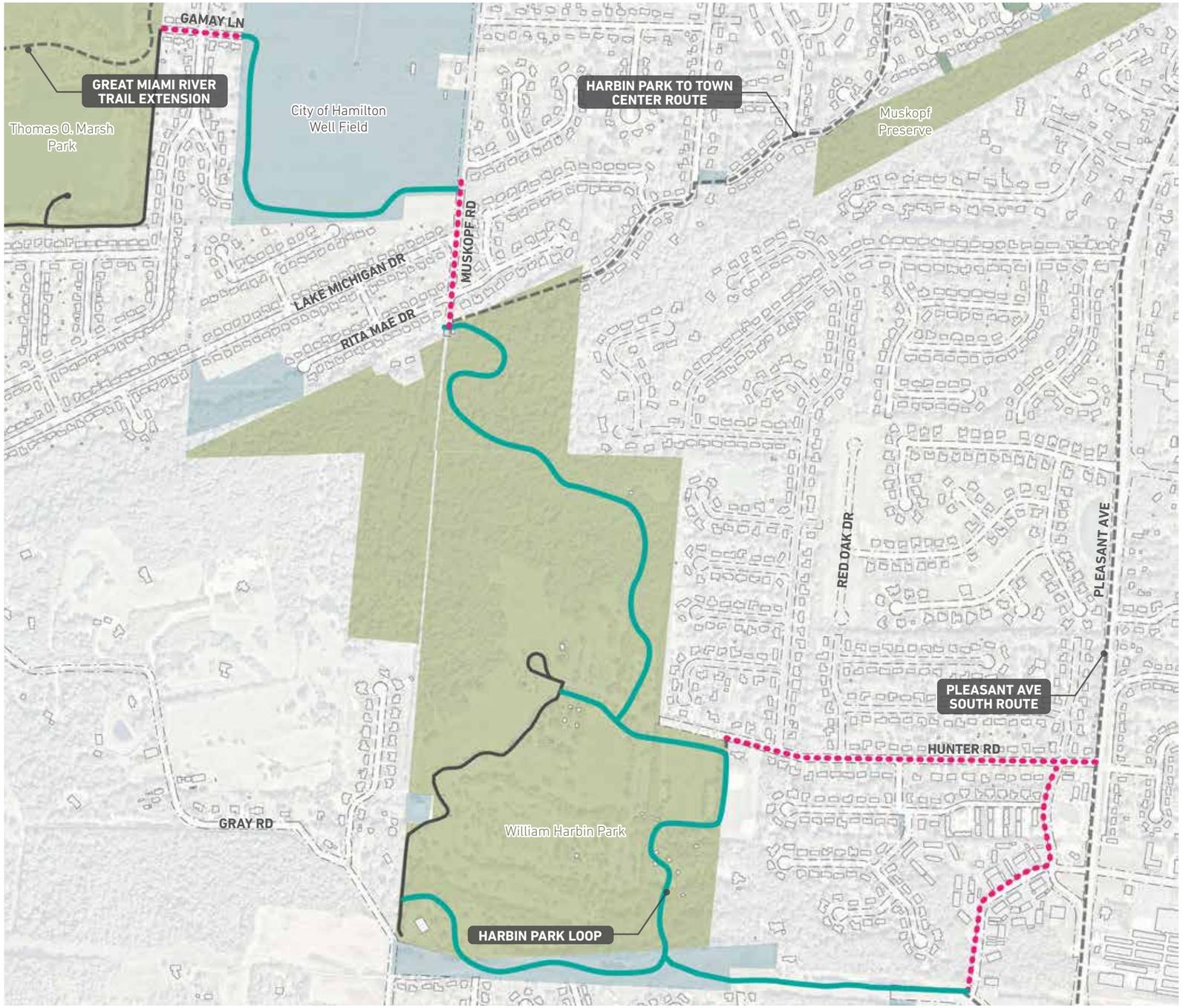

HARBIN PARK

Facility Type:

Multi-Use Path and Shared Road

Notes

- Route connects from Pleasant Avenue through Harbin Park to Marsh Park.
- This route aligns through a Hamilton well field. Use of this property for the route will require a partnership with the City of Hamilton.
- This route is primarily a multi-use path. However, on some neighborhood roads it is simpler to use a shared road facility to make connections.
- This route connects to the Great Miami River Trail.

LEGEND

- Proposed Shared Road
- Proposed Multi-Use Path
- Existing Multi-Use Path
- Other Major Route
- Publicly-Owned Parcel
- Park / Green Space

0′ 400′ 800′ 1600′ N

MAJOR ROUTES

HARBIN PARK TO TOWN CENTER

Facility Type:

Multi-Use Path and Shared Road

Notes

- Connection from the bottom of Harbin Park to the Village Green Park.
- This connection utilizes low-volume, low-speed residential streets to provide a more direct connection to the Village Green Park and Town Center for many residential neighborhoods.
- Multi-use paths are used to bridge the gaps along the trail where subdivisions or streets do not connect directly.

LEGEND

- Proposed Shared Road
- Proposed Multi-Use Path
- Other Major Route
- Publicly-Owned Parcel
- Park / Green Space

0′ 240′ 480′ 960′ N

Attachment: 2020 Fairfield Connects Final Report - Low resolution (1627 : Adoption of Fairfield Connects - Citywide Active Transportation Plan)

MAJOR ROUTES

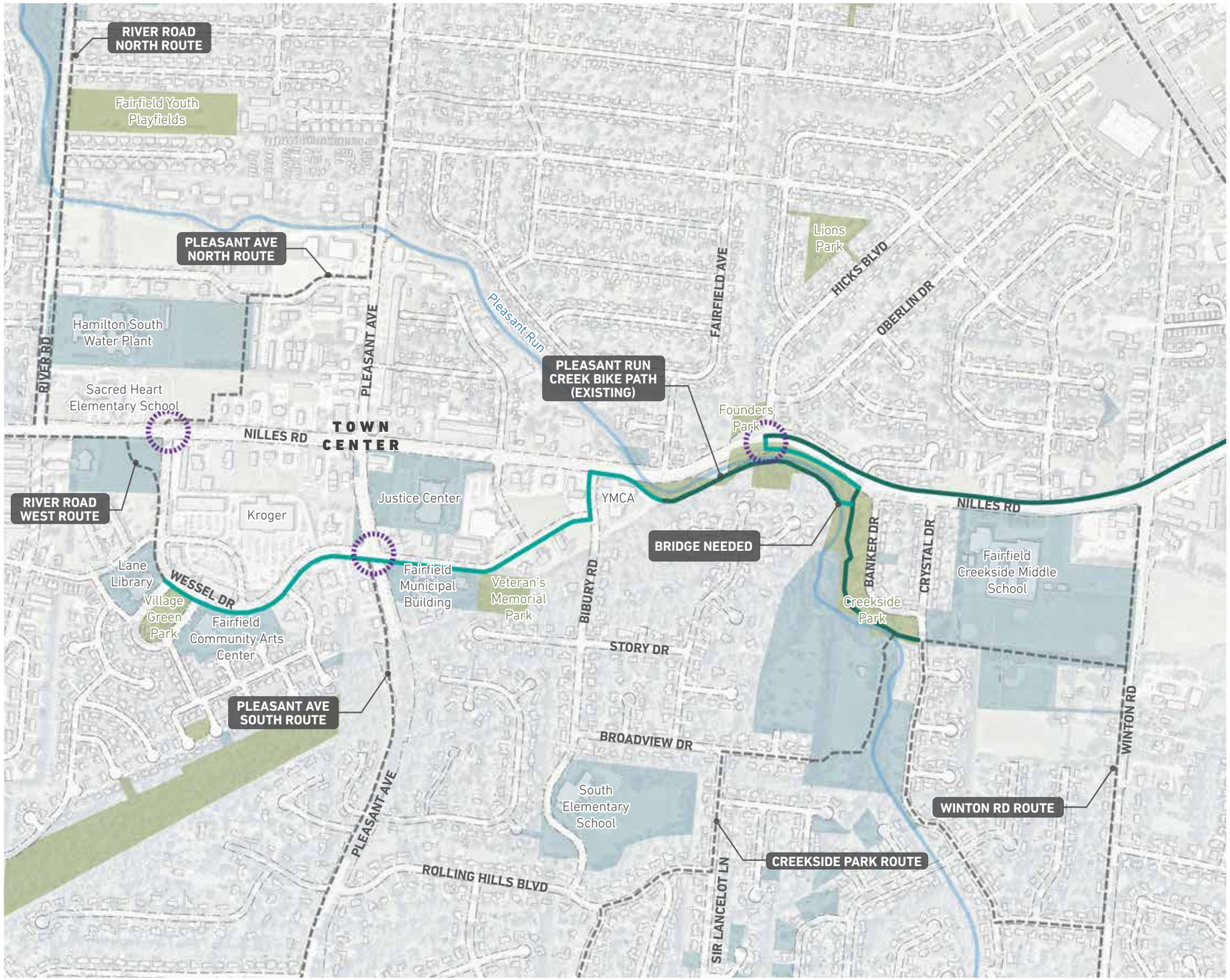

NILLES - WESSEL

Facility Type:

Multi-Use Path

Notes

- Route connects from the River Road West Route through the Town Center Area and East to Route 4 (Dixie Highway).
- Along the route is the YMCA, Creekside Park, and Creekside Middle School.
- The multi use path proposed replaces the existing sidewalk on the south and west sides of Wessel Drive.
- The path utilizes the existing wide sidewalk on the north side of Nilles Road across from Creekside Park as it makes its way east to Route 4.

LEGEND

- Proposed Multi-Use Path
- Existing Multi-Use Path
- Other Major Route
- Signalized Crossing
- Publicly-Owned Parcel
- Park / Green Space

0′ 400′ 800′ 1600′ N

MAJOR ROUTES

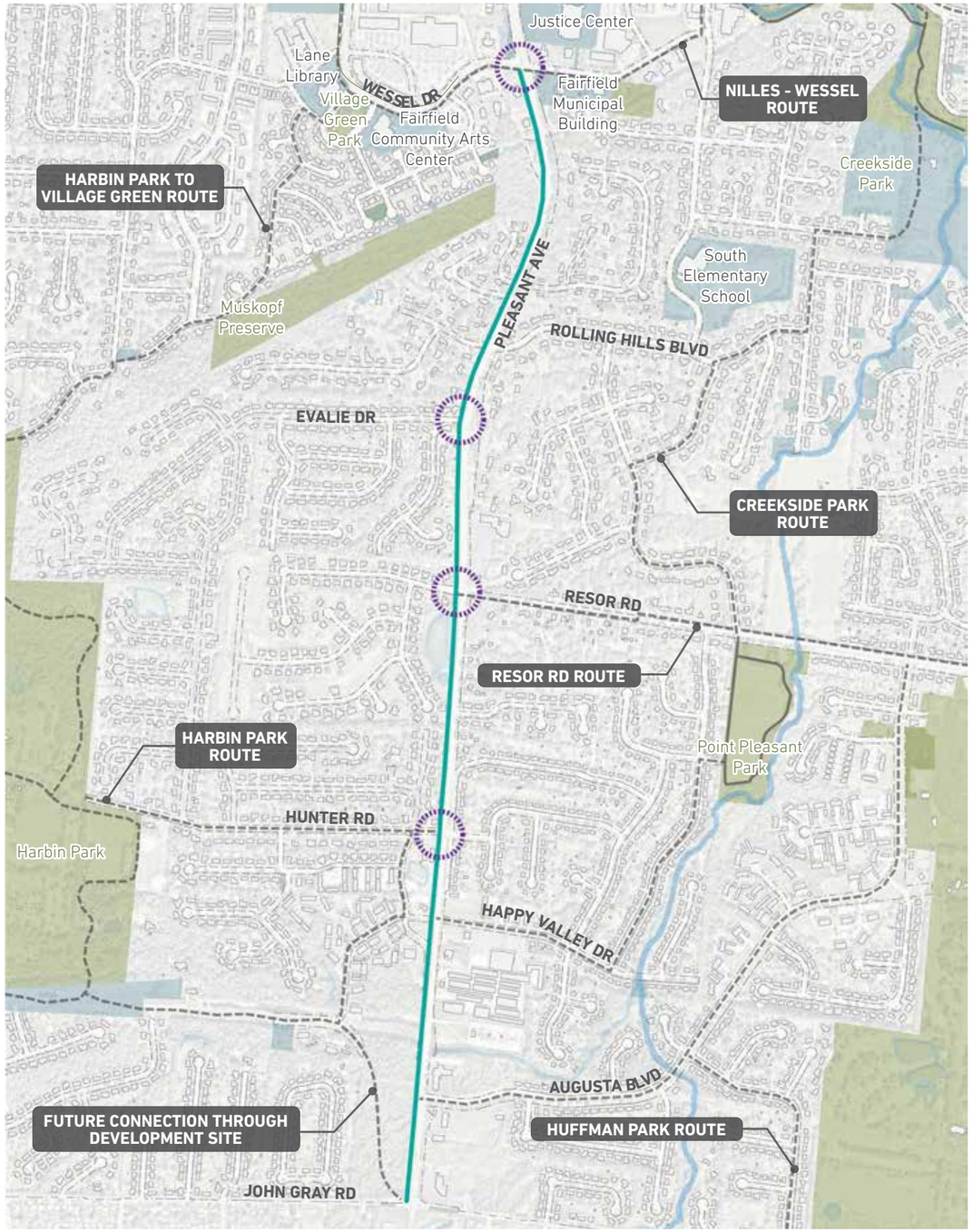

PLEASANT AVE SOUTH

Facility Type:

Multi-Use Path

Notes

- This route has topographical challenges, dense vegetation, and right-of-way limitations.
- This is a primary north-south connection within the city that interconnects many neighborhoods, parks, and the Town Center.
- Upon full build-out, this route will play a key interconnecting role between multiple other routes.
- It will be necessary to coordinate with the developer of the property on the northwest corner of John Gray Road and Pleasant Avenue to determine the exact route. Ideally this would include a direct connection to Harbin Park.

LEGEND

- Proposed Multi-Use Path
- Existing Multi-Use Path
- Other Major Route
- Signalized Crossing
- Publicly-Owned Parcel
- Park / Green Space

0′ 600′ 1200′ 1800′ N

Attachment: 2020 Fairfield Connects Final Report - Low resolution (1627 : Adoption of Fairfield Connects - Citywide Active Transportation Plan)

MAJOR ROUTES

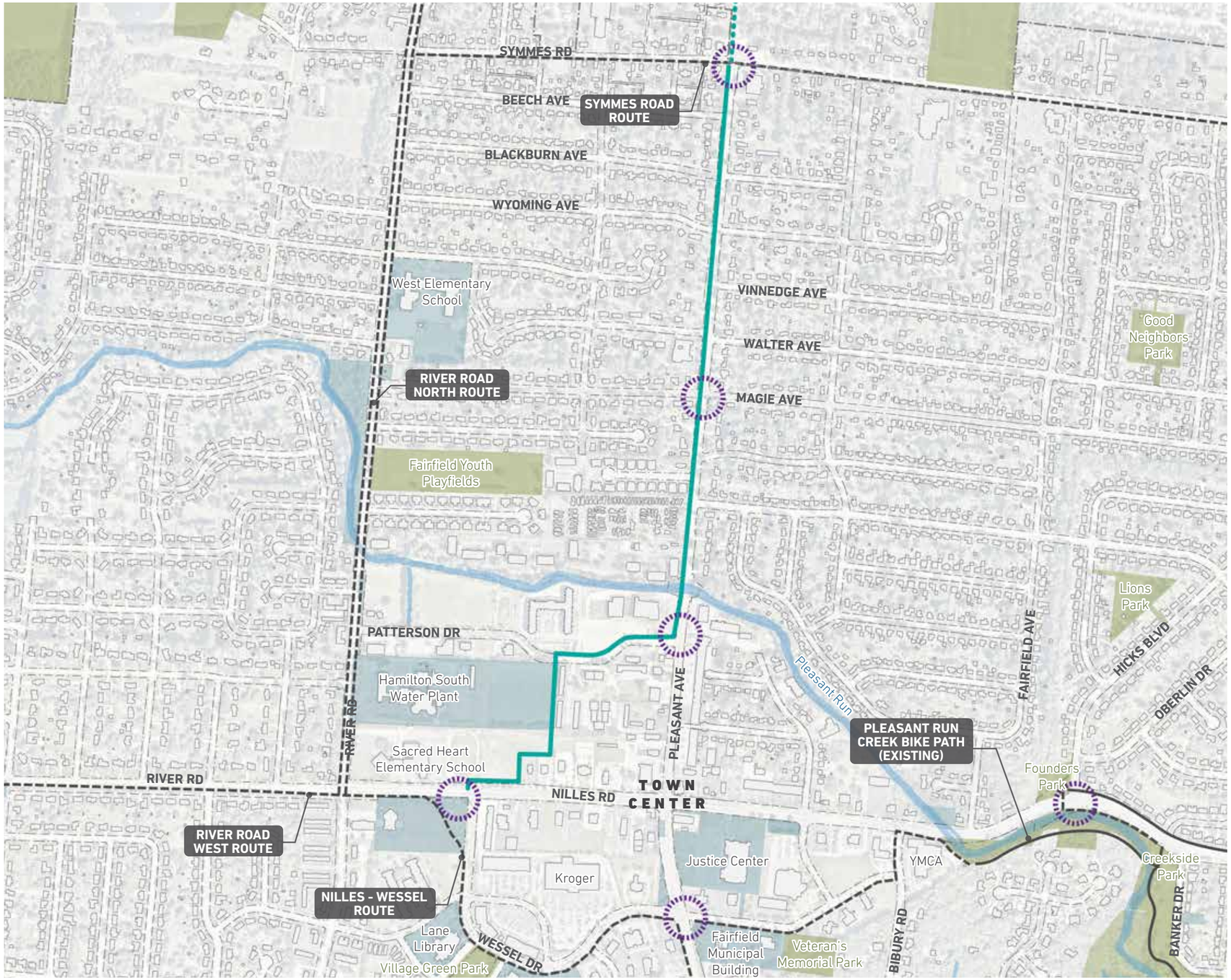

PLEASANT AVE NORTH

Facility Type:

Multi-Use Path

Notes

- This route connects the Town Center area north along Pleasant Avenue to the boundary with the City of Hamilton.
- This route will connect to a proposed City Hamilton multi-use path in the along Pleasant Avenue at the corporation limit.

LEGEND

- Proposed Multi-Use Path
- Proposed Multi-Use Path in Other Jurisdiction
- Existing Multi-Use Path
- Other Major Route
- Signalized Crossing
- Publicly-Owned Parcel
- Park / Green Space

0′ 400′ 800′ 1600′ N

MAJOR ROUTES

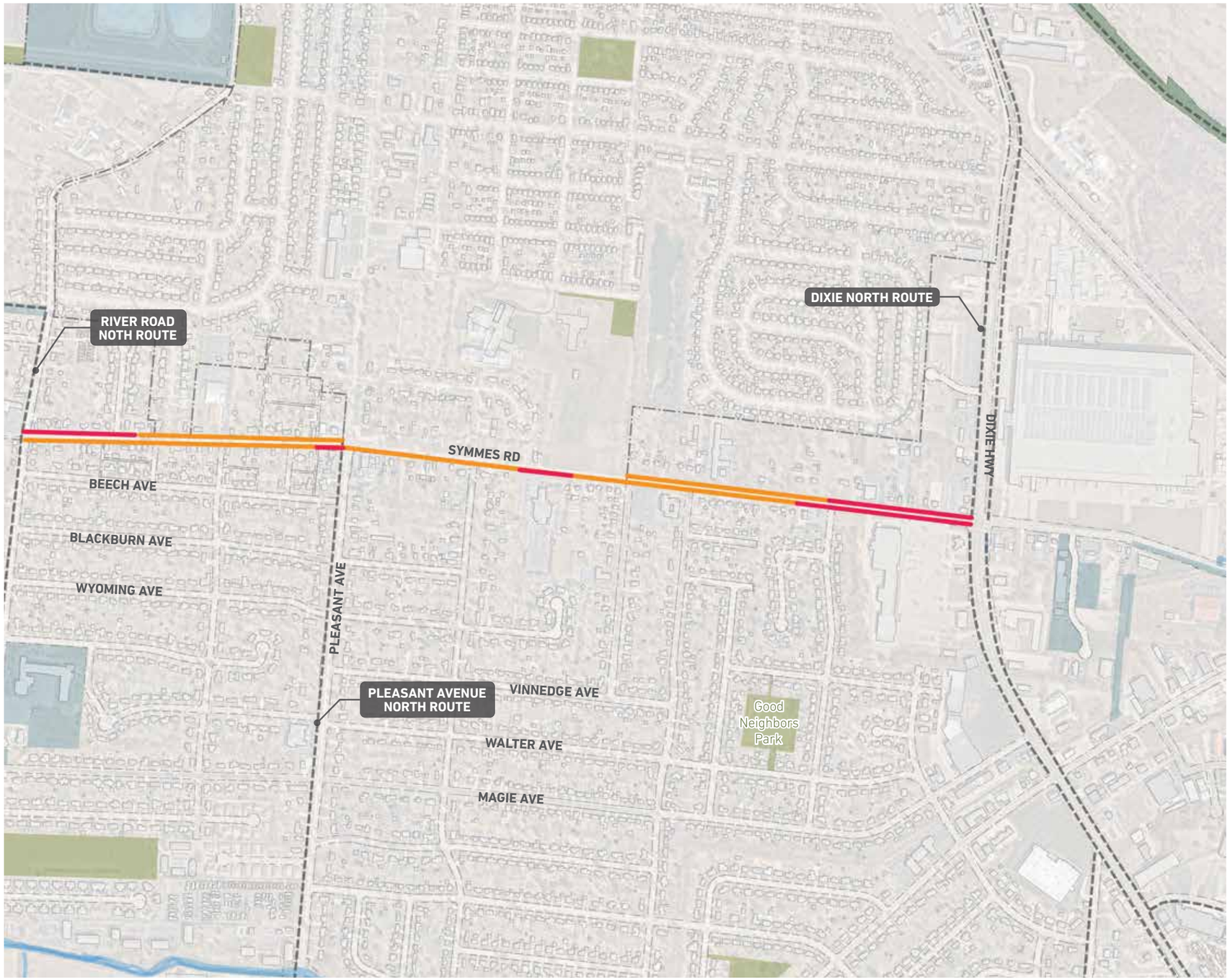

SYMMES ROAD

Facility Type:

Sidewalk

Notes

- This route provides another east-west connection from Dixie Highway (Route 4) to River Road West. This helps to better connect multiple areas of the city.
- Employment areas east of Dixie Highway will now be better connected with neighborhoods west of Dixie Highway.
- This route will focus on completing the sidewalk network by filling in the gaps between existing sidewalks.
- Coordination will be required with the City of Hamilton to complete the north side of the sidewalk.

LEGEND

- Proposed Sidewalk
- Existing Sidewalk
- Other Major Route
- Publicly-Owned Parcel
- Park / Green Space

0′ 400′ 800′ 1600′ N

Attachment: 2020 Fairfield Connects Final Report - Low resolution (1627 : Adoption of Fairfield Connects - Citywide Active Transportation Plan)

MAJOR ROUTES

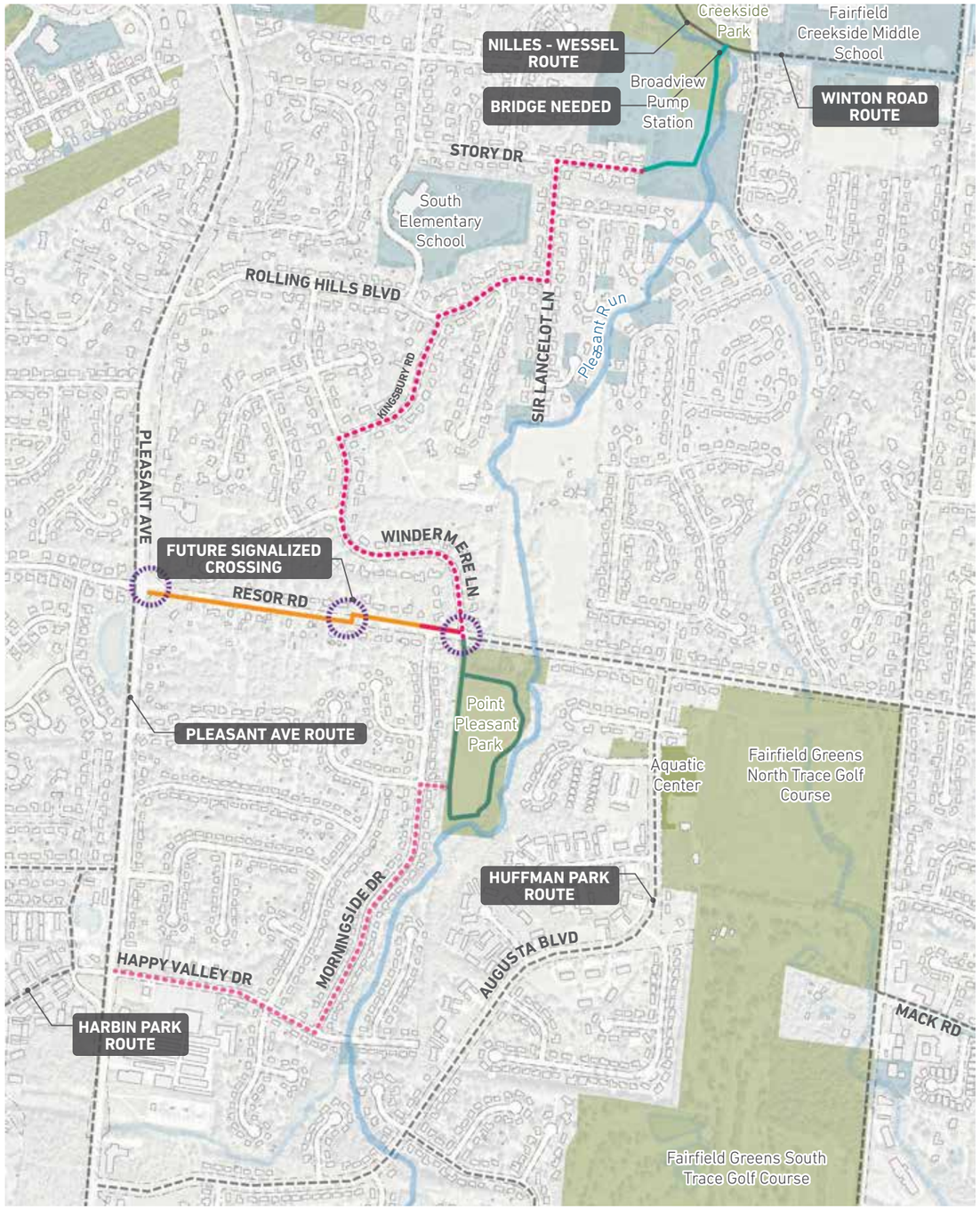

CREEKSIDE PARK AND RESOR ROAD WEST

Facility Type:

Creekside Park: Multi Use Path and Shared Road
Resor Road West: Sidewalk

Notes (Creekside)

- Creekside Park Route extends through residential areas to Pleasant Avenue at Happy Valley Drive.
- Facility is primarily a shared road on low volume, low speed neighborhood streets, with a short section of multi-use path in Point Pleasant Park.

Notes (Resor)

- Resor Road Route helps fill in a prominent gap in the sidewalk network that will connect residential areas to the Pleasant Avenue Route.
- The route has a steep slope and difficult sight lines.

LEGEND

- Proposed Shared Road
- Proposed Sidewalk
- Existing Sidewalk
- Proposed Multi-Use Path
- Existing Multi-Use Path on Major Route
- Other Major Route
- Signalized Crossing
- Publicly-Owned Parcel
- Park / Green Space

0′ 500′ 1000′ 1500′ N

Attachment: 2020 Fairfield Connects Final Report - Low resolution (1627 : Adoption of Fairfield Connects - Citywide Active Transportation Plan)

MAJOR ROUTES

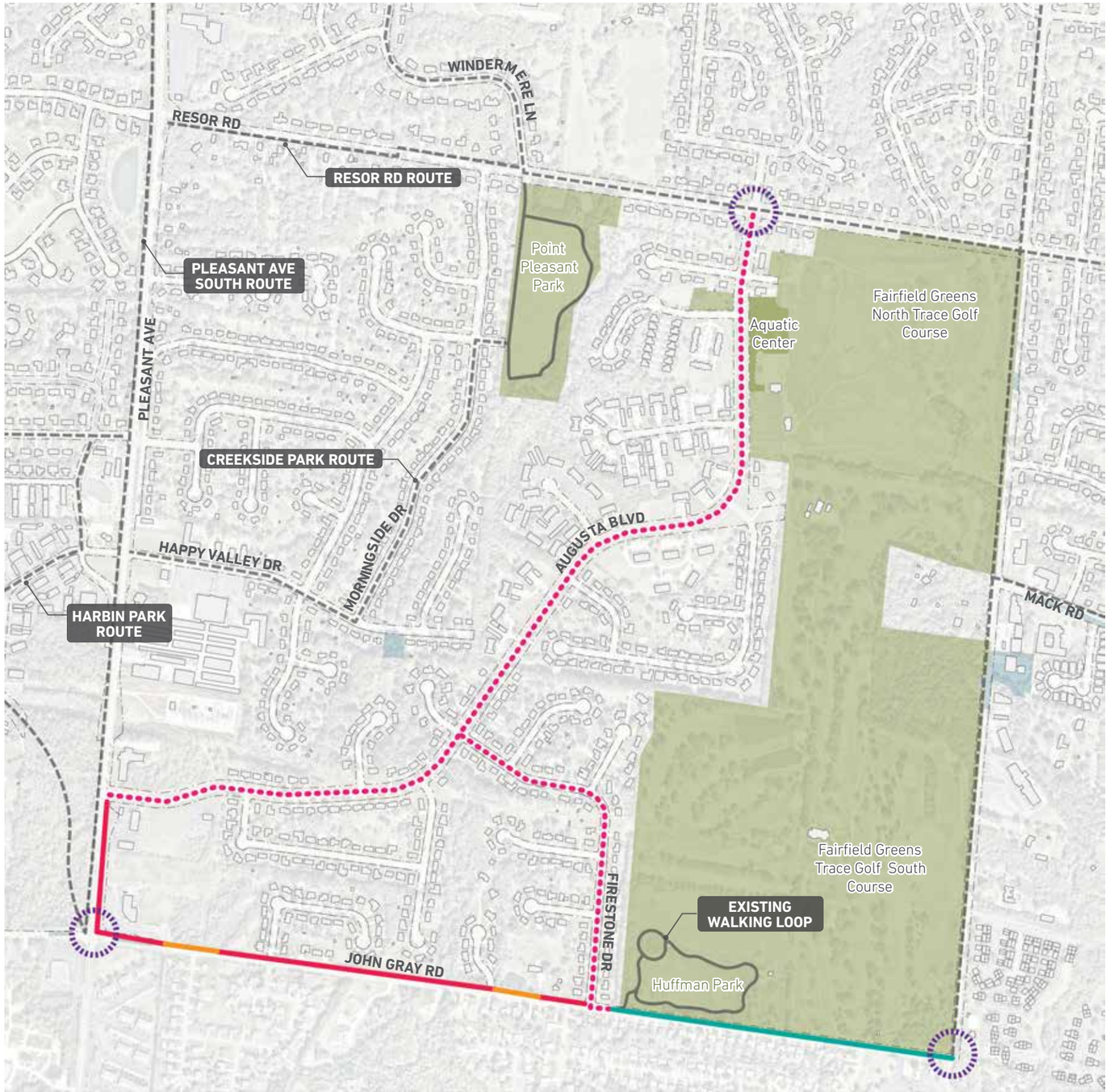

HUFFMAN PARK

Facility Type:

Shared Road

Notes

- Huffman Park Route connects the Resor Road East Route to Pleasant Avenue via Augusta Boulevard and to Huffman Park.
- This route promotes better connectivity to the aquatic center and nearby neighborhoods.

LEGEND

- Proposed Shared Road
- Proposed Sidewalk
- Existing Sidewalk
- Proposed Multi-Use Path
- Existing Multi-Use Path
- Other Major Route
- Signalized Crossing
- Publicly-Owned Parcel
- Park / Green Space

0′ 400′ 800′ 1200′ N

MAJOR ROUTES

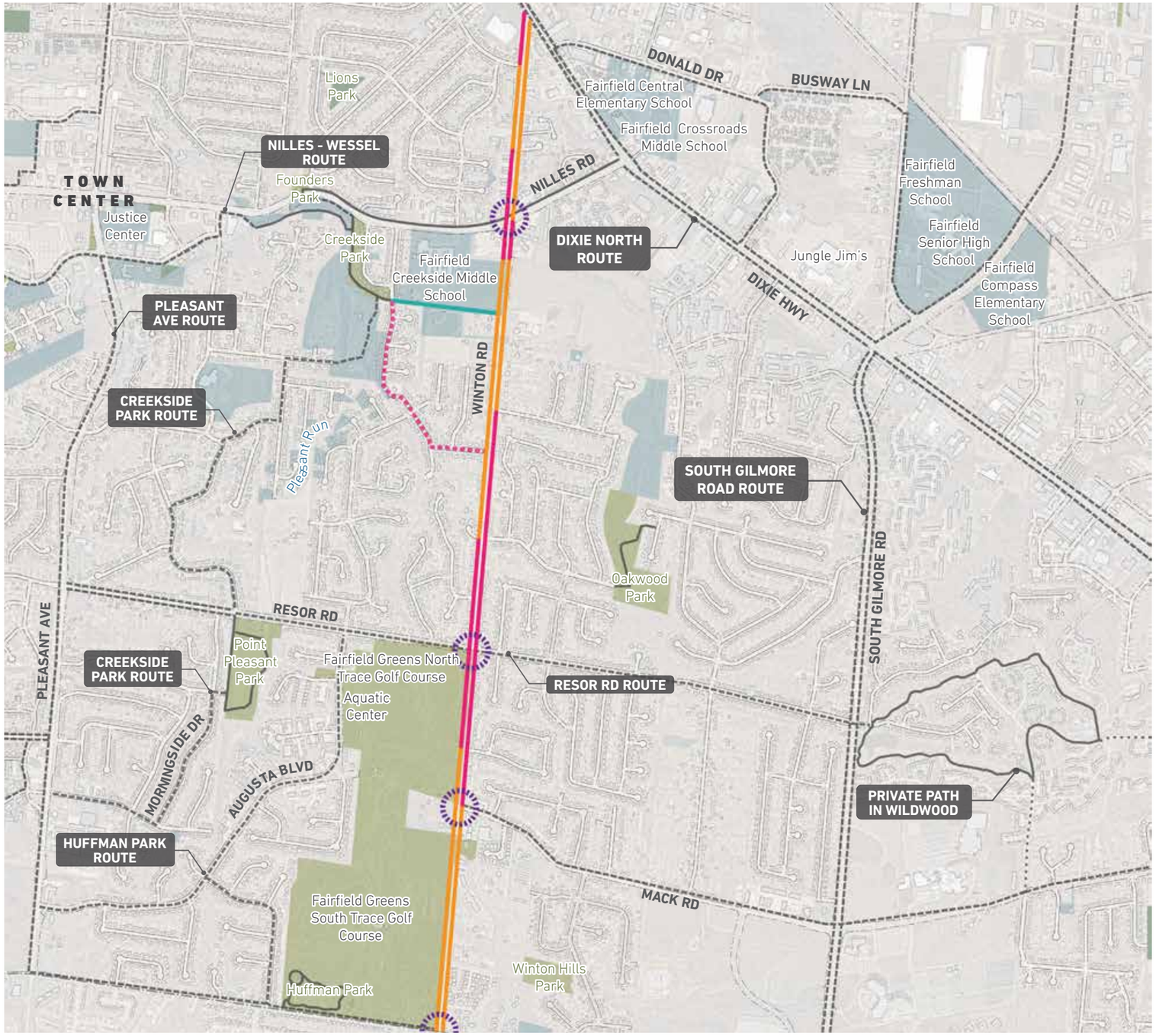

WINTON ROAD

Facility Type:

Sidewalk

Notes

- It is important to ensure complete sidewalk connectivity on a major collector road like Winton Road.
- This route promotes better connectivity throughout the city as it directly connects to multiple other routes that provide connections to schools, the Town Center and parks.
- With the development of property along Mack Road, consider routing through Winton Hills Park for additional connections.

LEGEND

- Proposed Shared Road
- Proposed Sidewalk
- Existing Sidewalk
- Proposed Multi-Use Path
- Existing Multi-Use Path
- Existing Shared Road
- Other Major Route
- Signalized Crossing
- Publicly-Owned Parcel
- Park / Green Space

0′ 800′ 1600′ 2400′ N

Attachment: 2020 Fairfield Connects Final Report - Low resolution (1627 : Adoption of Fairfield Connects - Citywide Active Transportation Plan)

MAJOR ROUTES

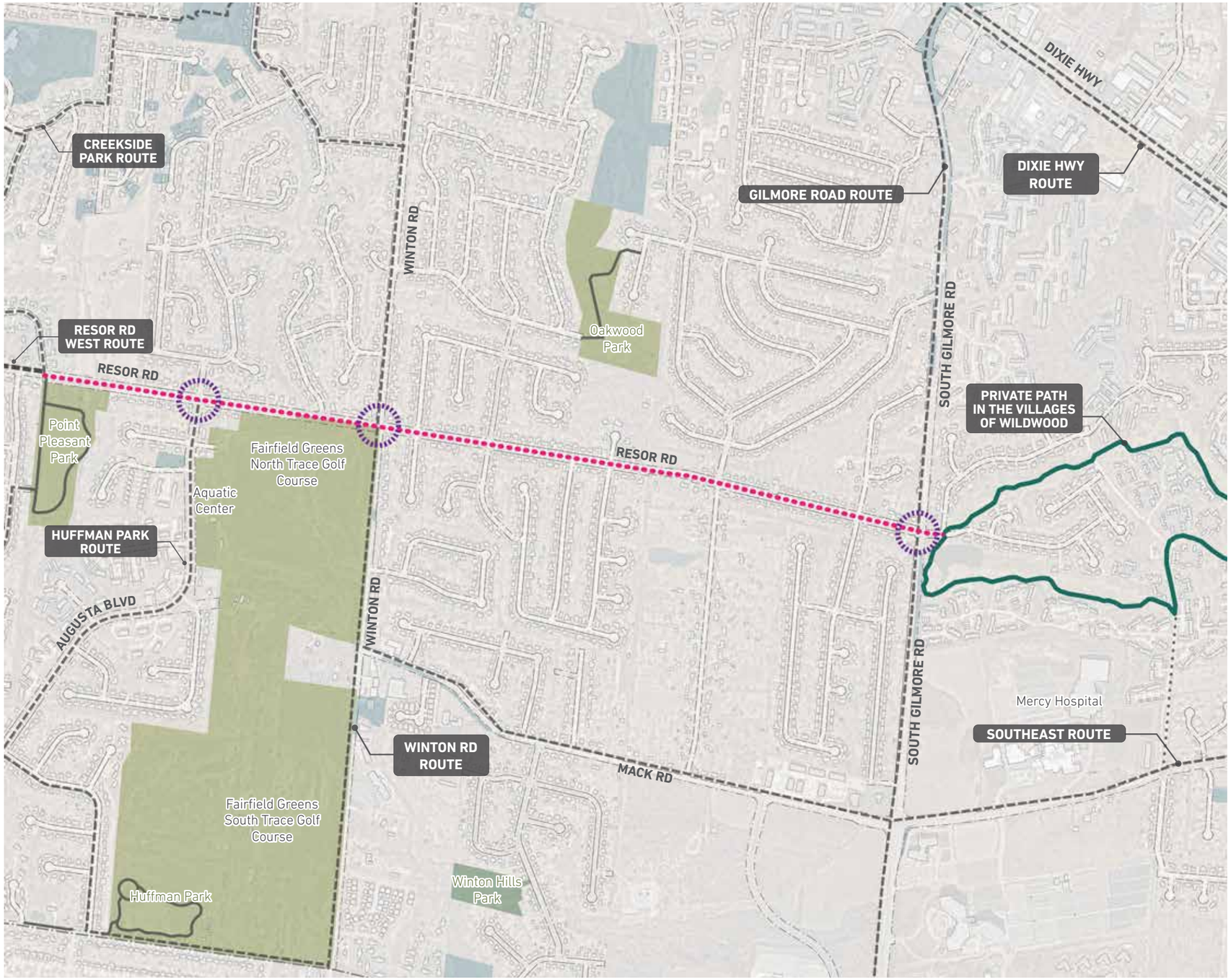

RESOR ROAD EAST

Facility Type:

Shared Road and Multi-Use Path

Notes

- This shared road connection from Point Pleasant Park east to The Villages of Wildwood and its trail network provides the east side neighborhoods with a connection to the routes on the west side of Fairfield.
- This important connection links the eastern side of the city to the Great Miami River Trail.
- This route will tie in to the existing path system at Wildwood. That path is privately owned area and thus not under city maintenance or management.
- Note that sidewalks do exist along this route for pedestrian connectivity. The inclusion of this facility in the plan was to improve bicycle connectivity to this part of the city.
- A multi-use path is not feasible due to the high number of driveways it would cross thus creating conflict points.

LEGEND

- Proposed Shared Road
- Existing Multi-Use Path on Major Route
- Existing Multi-Use Path
- Existing Shared Road
- Other Major Route
- Signalized Crossing
- Publicly-Owned Parcel
- Park / Green Space

0′ 300′ 600′ 1200′ N

MAJOR ROUTES

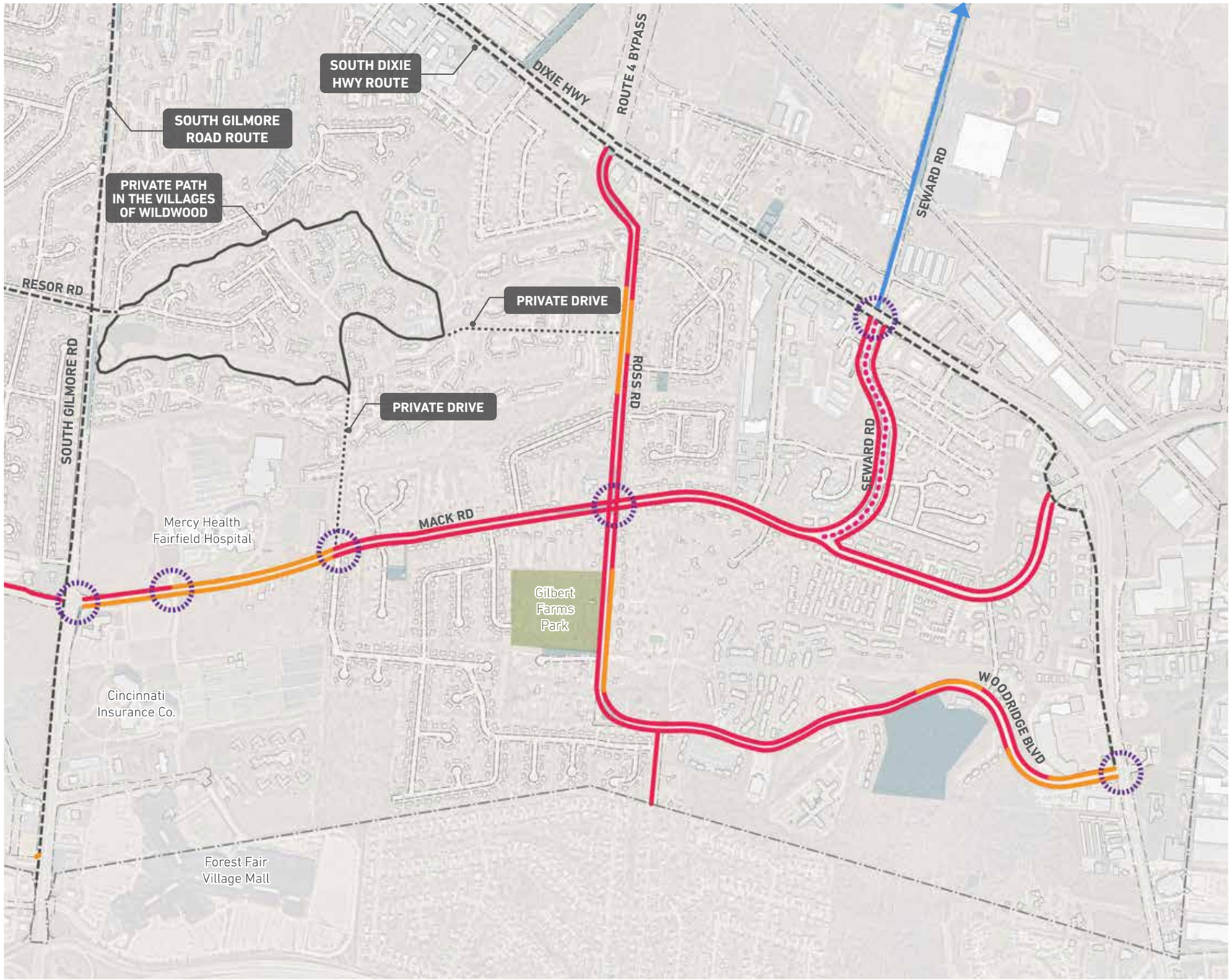

SOUTHEAST ROUTE

Facility Type:

Sidewalk and Shared Road

Notes

- There are many apartments complexes and subdivisions in the southeastern portion of Fairfield.
- These residential areas would benefit from a completed sidewalk network to promote walkability to Dixie Highway and other routes and community destinations.
- Bike lanes extend to the Miami to Miami trail.

LEGEND

- Proposed Shared Road
- Proposed Bike Lane
- Proposed Sidewalk
- Existing Sidewalk
- Existing Multi-Use Path
- Existing Shared Road
- Other Major Route
- Signalized Crossing
- Publicly-Owned Parcel
- Park / Green Space

0′ 300′ 600′ 1200′ N

MAJOR ROUTES

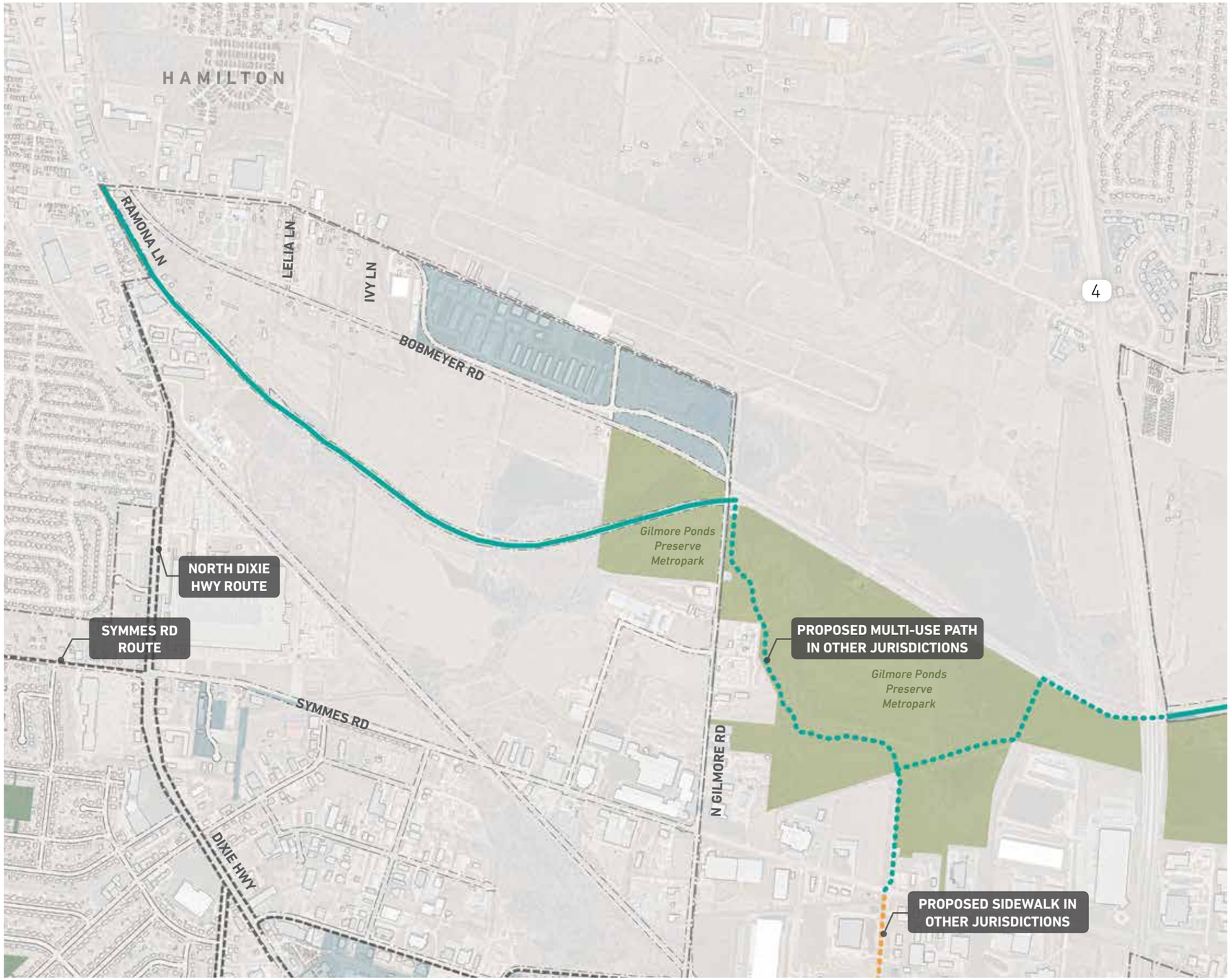

MIAMI TO MIAMI TRAIL EXTENSION

Facility Type:

Multi-Use Path

Notes

- The Miami to Miami trail is similar to the Great Miami River Trail Extension. This route highlights Fairfield's opportunity to connect to a major regional trail network.
- This route uses former Maimi-Erie Canal right-of-way to connect from the Fairfield-Hamilton border at Bobmeyer Road and Dixie Highway to Gilmore Ponds Preserve Metropark.

LEGEND

- Proposed Multi-Use Path
- Proposed Multi-Use Path in Other Jurisdiction
- Proposed Sidewalk in Other Jurisdiction
- Other Major Route
- Publicly-Owned Parcel
- Park / Green Space

0′ 400′ 800′ 1600′ N

Attachment: 2020 Fairfield Connects Final Report - Low resolution (1627 : Adoption of Fairfield Connects - Citywide Active Transportation Plan)

MAJOR ROUTES

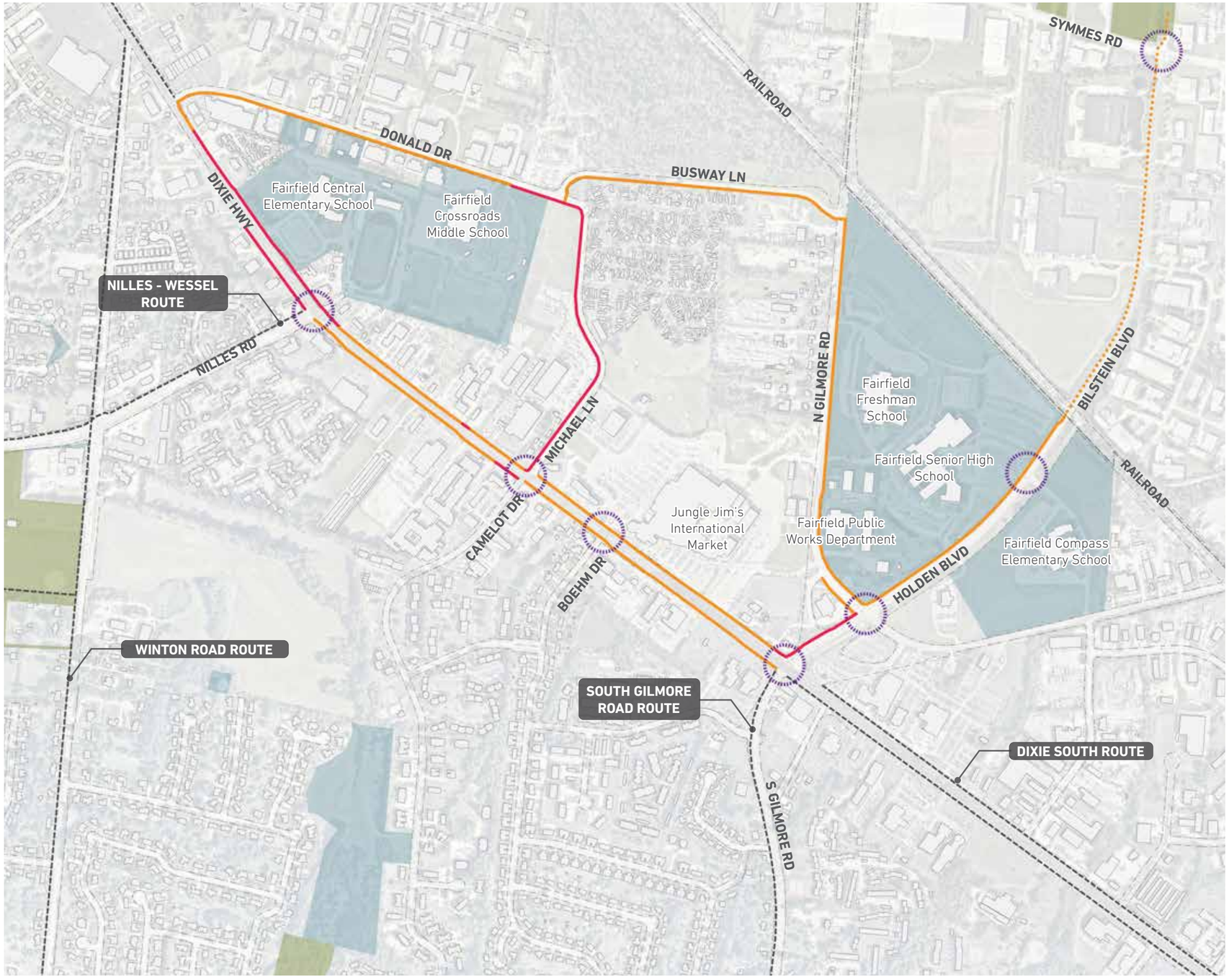

DIXIE NORTH

Facility Type:

Sidewalk

Notes

- The Dixie North Route provides more complete connectivity around Dixie Highway and the various Fairfield City School District campuses.
- This route focuses on completing gaps in the sidewalk network and providing safe pedestrian routes, particularly for students.
- This route will require the city to coordinate with the City of Hamilton for the Bilstein Boulevard portion.
- North of Donald Drive, there are few remaining sidewalk gaps that exist on Dixie Highway. There should be a continuous path to the City of Hamilton.

LEGEND

- Proposed Sidewalk
- Proposed Sidewalk in Other Jurisdiction
- Existing Sidewalk
- Other Major Route
- Signalized Crossing
- Publicly-Owned Parcel
- Park / Green Space

0′ 400′ 800′ 1600′ N

Attachment: 2020 Fairfield Connects Final Report - Low resolution (1627 : Adoption of Fairfield Connects - Citywide Active Transportation Plan)

MAJOR ROUTES

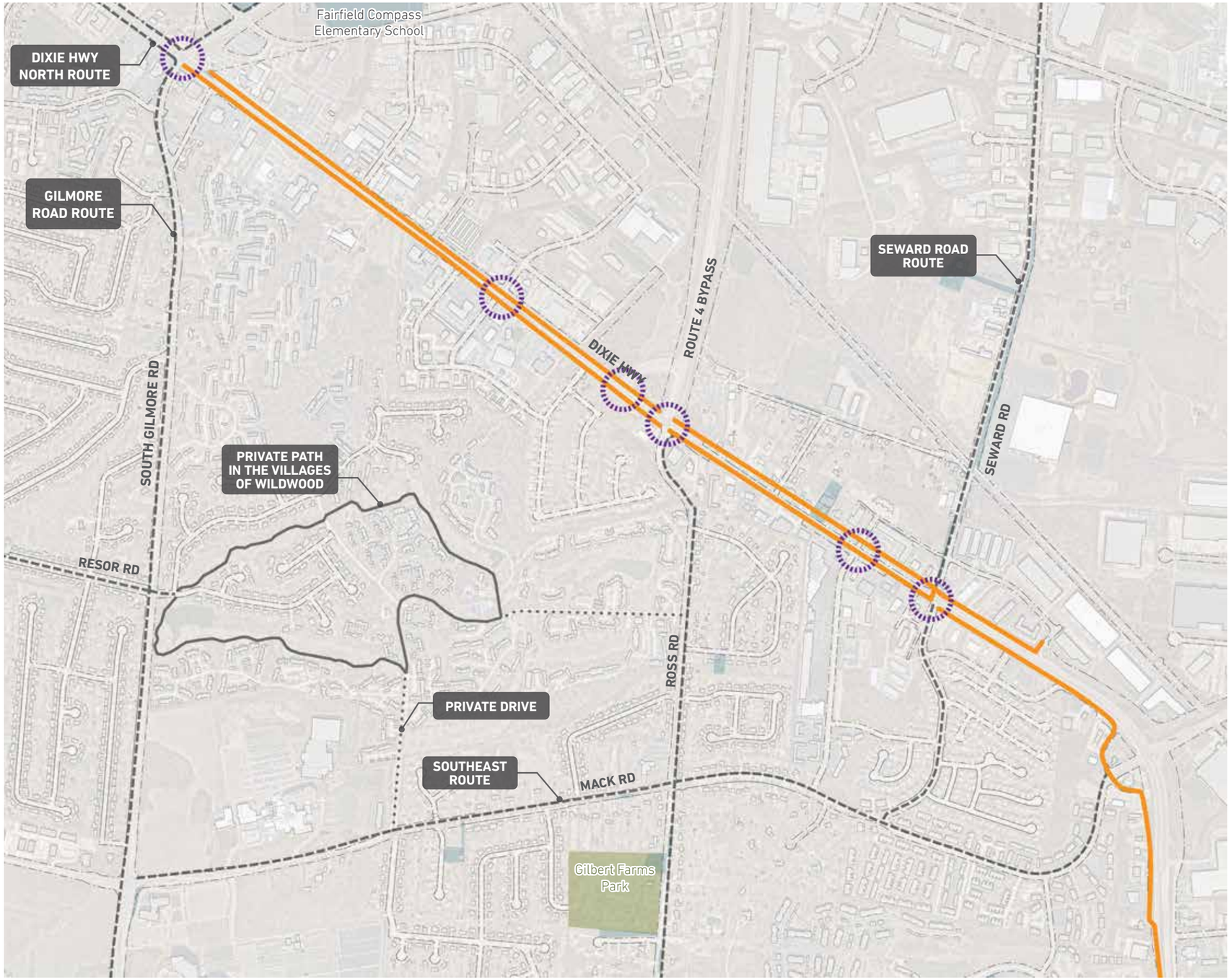

DIXIE SOUTH

Facility Type:

Sidewalk

Notes

- The Dixie South Route promotes continued pedestrian connectivity along Dixie Highway south of Gilmore Road.
- Completing the sidewalk network in this area will likely require involvement from the private sector when commercial properties are redeveloped.
- At Dixie Highway and Seward Road, the plan provides a pedestrian connection for hotel guests on the north side of Dixie Highway to safely cross the road to businesses, restaurants, and retail on the south side of Dixie Highway.

LEGEND

- Proposed Sidewalk
- Existing Multi-Use Path
- Existing Shared Road
- Other Major Route
- Signalized Crossing
- Publicly-Owned Parcel
- Park / Green Space

0′ 300′ 600′ 1200′ N

MAJOR ROUTES

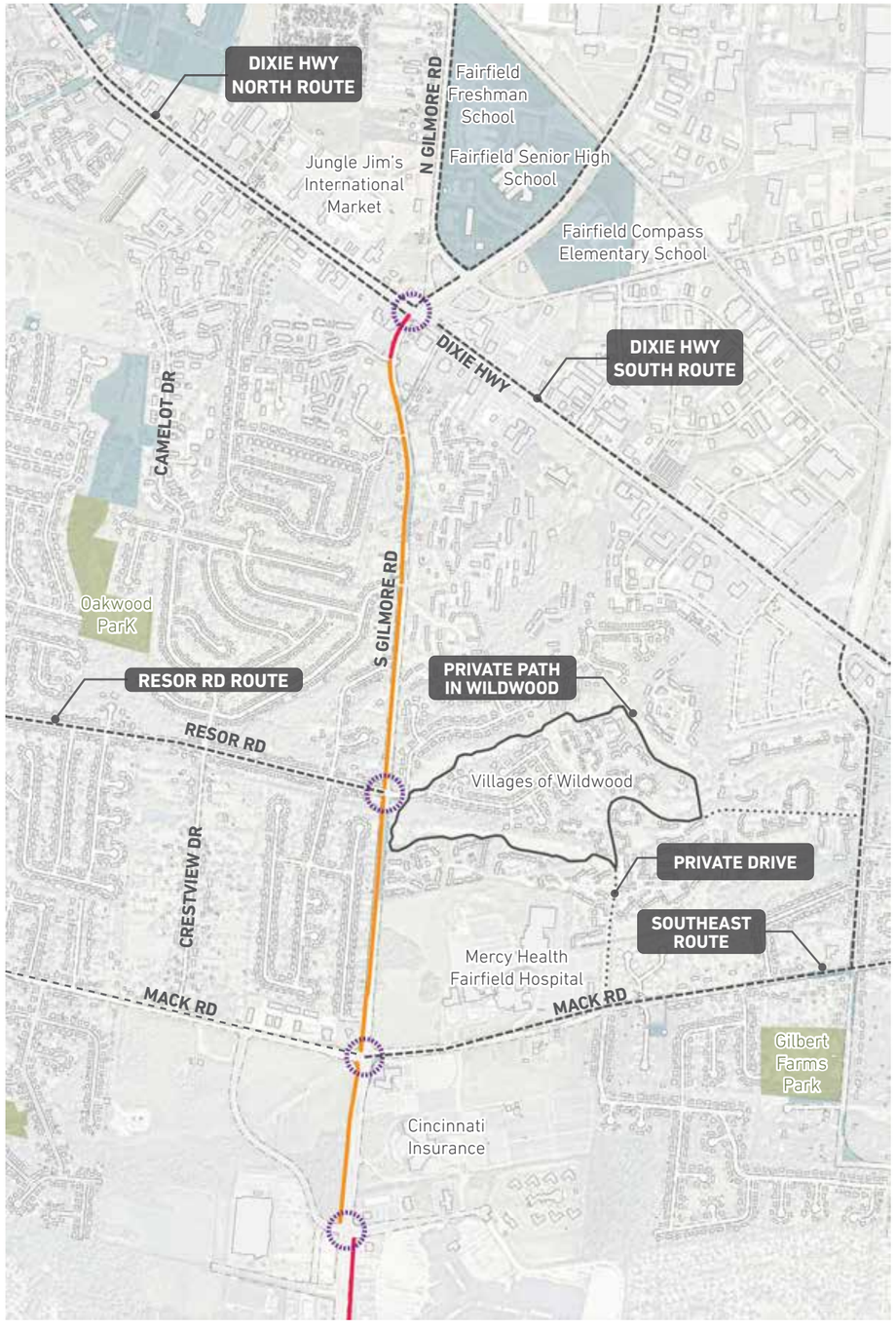

SOUTH GILMORE ROAD

Facility Type:

Sidewalk

Notes

- Similar to Pleasant Avenue and Winton Road, the Gilmore Road route serves as a primary arterial road and a north-south axis for the community.
- Having a complete sidewalk network will allow for community residents and workers to walk between neighborhoods, parks, schools, and commercial and employment destinations.
- The area around South Gilmore Road and Mack Road is a major employment center with additional development opportunities.

LEGEND

- Proposed Sidewalk
- Existing Sidewalk
- Existing Multi-Use Path
- Existing Shared Road
- Other Major Route
- Signalized Crossing
- Publicly-Owned Parcel
- Park / Green Space

0′ 800′ 1600′ 2400′ N

Attachment: 2020 Fairfield Connects Final Report - Low resolution (1627 : Adoption of Fairfield Connects - Citywide Active Transportation Plan)

4 IMPLEMENTATION STRATEGY

SUMMARY OF IMPLEMENTATION STRATEGY
IMPLEMENTATION FRAMEWORK TABLE
FUNDING SOURCES & STRATEGY

Attachment: 2020 Fairfield Connects Final Report - Low resolution (1627 : Adoption of Fairfield Connects - Citywide Active Transportation Plan)

IMPLEMENTATION STRATEGY

Implementation Framework

Critical to this connectivity plan is the evaluation of the proposed routes and the formulation of an implementation strategy. This strategy provides a clear comparison among the routes to determine which routes should take priority for targeted monetary resources. The framework, outlined below, focuses on identifying the basic characteristics of each route, how well it meets the goals of the community, what challenges may be faced during construction, and preliminary cost estimates. The implementation strategy also covers high-level policy recommendations that should be further investigated but offer potential to improve the connectivity of Fairfield and promote the safety and well-being of users. Lastly, the strategy covers some of the primary funding sources that will be crucial to implementing this plan. These facilities cannot be locally funded in their entirety; smaller efforts such as filling in sidewalk gaps may be funded through purely local sources, but trails and more comprehensive routes will require outside resources that need to be procured.

Implementation Framework Characteristics:

Facility Types:
Defines which facilities are used to complete the route. Multiple facility types may be required while other routes may only use one type. This information was very important in evaluating costs for each route.

Description:
A brief description of the route that explains the areas which it connects and why the route is critical to the plan.

Goals Met:
This category states which goals of the plan have been achieved. If a route is meeting multiple goals of the plan, it will likely increase its priority ranking.

Contributing Factors to Implementation:
This category recognizes aspects of the route that are facilitating the implementation of the route. An example could be a wide right-of-way, which provides space to build the facility, or a relatively flat road that will make construction easier.

Barriers to Implementation:
There will be limitations and issues faced during the implementation of this plan. This category identifies what issues may exist today such as elevation changes, limited right-of-way, and utility pole locations. An honest assessment of each route will need to be conducted in order to accurately represent the feasibility and priority level for each.

Preliminary Cost Estimate:
Based on the understanding that had been developed for each route, a range of costs for the construction of each route has been provided. Each one of the routes will need further detailed studies and refined cost estimates. However, this is a starting point which should assist city leadership and staff to understand the overall magnitude of such an investment and better prepare them to pursue outside funding assistance.

Priority Level:
Based on feedback and evaluation of the various characteristics for each route, a recommendation for the priority of each route has been developed. This priority will provide general guidance on when the city should construct that route.

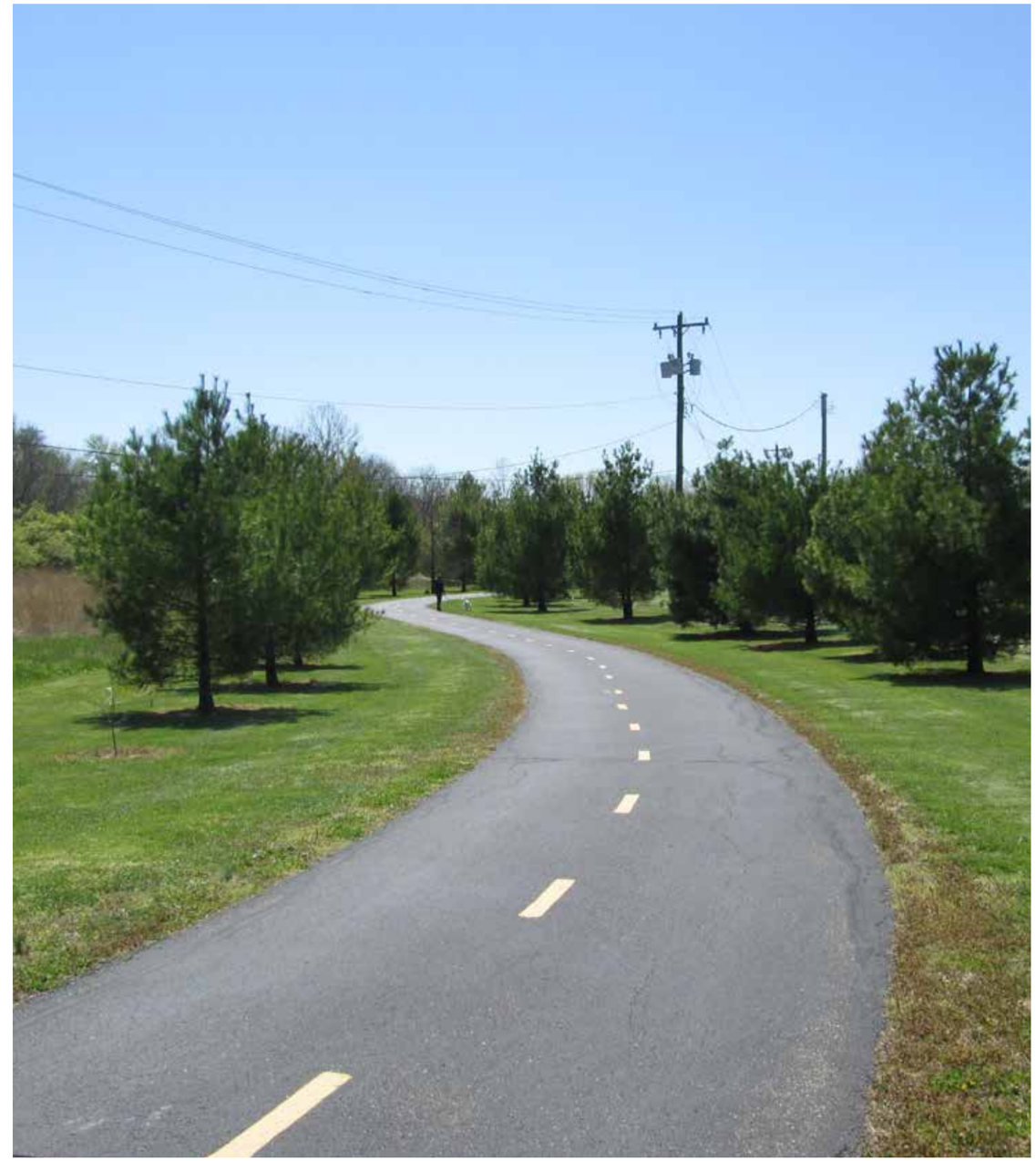

Great Miami River Trail in Waterworks Park.

IMPLEMENTATION FRAMEWORK

Note- the cost estimates included in this framework table are an engineer's construction estimate. They include a 20% contingency and a 15% inflation adjustment as implementation will occur over a long time span.

ROUTE	FACILITY TYPES	DESCRIPTION	GOALS MET	CONTRIBUTING FACTORS TO IMPLEMENTATION	BARRIERS TO IMPLEMENTATION	PRELIMINARY COST ESTIMATE	PRIORITY
RIVER ROAD WEST	Multi-Use Path	Connects Town Center to Great Miami River Trail in both Waterworks Park and Marsh Park	» Connect to Major Destinations » Connect to Town Center » Connect to Existing Trail » Connect to Parks	» Existing green-strip within right-of-way provides room for multi-use path	» Intersection at River Road and Groh Lane » Areas along route without green strip	$397,000	HIGH
RIVER ROAD NORTH	Sidewalk	Connects neighborhoods to West Elementary, Town Center, and Joyce Park	» Connect to Major Destinations » Connect Neighborhoods » Connect to Town Center » Connect to Parks	» Flat area for the route » Much of it is existing sidewalk	» Creek crossing at Pleasant Run between the Fairfield Youth Playfields and the Hamilton South Water Plant will be challenging	$438,000	LOW
GREAT MIAMI RIVER TRAIL EXTENSION	Multi-Use Path	An extension of the regional trail south to Hamilton County	» Connect to Existing Trails » Improve Public Health » Connect to Parks	» Much of the route is on public property » Mostly flat area for the route » Regional support to complete Great Miami River Trail	» Coordination with GMRT network. » Marsh Park has challenges with ponds and wetlands	$3,721,000	HIGH
HARBIN PARK	Multi-Use Path Shared Road	Connects Harbin Park to Marsh Park and Pleasant Avenue	» Connect to Parks » Improve Public Health	» Well field site is flat and largely undeveloped » Shared road segments are easy to implement	» Topography in Harbin Park is steep	$1,715,000	MEDIUM
HARBIN PARK TO TOWN CENTER	Shared Road Multi-Use Path	Connects Harbin Park to Village Green	» Connect Neighborhoods » Connect to Town Center » Connect to Parks	» Flat area for the route » Shared road is low investment » Multi-use path located on city owned parcels	» Community support	$115,000	MEDIUM
NILLES / WESSEL	Multi-Use Path	Connects Town Center area to Creekside Park, Creekside Middle School and Dixie Highway	» Connect to Town Center » Connect to Major Destinations » Connect to Parks	» Flat along most of route » Existing segments of multi-use paths	» Bridge is required over Pleasant Run Creek to connect to Creekside Park from trail behind YMCA	$989,000	MEDIUM
PLEASANT AVENUE SOUTH	Multi-Use Path	Connects neighborhoods and other routes to Town Center	» Connect Neighborhoods » Connect to Town Center	» Widespread community support for this critical connection	» Slopes adjacent to road » Property acquisition or easements needed » Possible need for retaining walls	$3,991,000	HIGH

Attachment: 2020 Fairfield Connects Final Report - Low resolution (1627 : Adoption of Fairfield Connects - Citywide Active Transportation Plan)

IMPLEMENTATION FRAMEWORK

ROUTE	FACILITY TYPES INCLUDED	DESCRIPTION	GOALS MET	CONTRIBUTING FACTORS	BARRIERS TO IMPLEMENTATION	PRELIMINARY COST ESTIMATE	PRIORITY
PLEASANT AVENUE NORTH	Multi-Use Path	Connects Town Center to neighborhoods to the north and City of Hamilton	» Connect Neighborhoods » Connect to Town Center	» Flat area for the route » Existing sidewalk in interim	» Property ownership » Pleasant Run Creek crossing » Utility poles » High number of driveways	$962,000	LOW
SYMMES ROAD	Sidewalk	Connects Dixie Highway to northern neighborhoods	» Connect Neighborhoods » Connect to Major Destinations	» Flat area for the route » Filling in gaps of sidewalk network	» Utility poles » Numerous driveways	$664,000	MEDIUM
CREEKSIDE PARK	Shared Road Multi-Use Path	Connects from Creekside Park through neighborhoods to Pleasant Avenue	» Connect Neighborhoods » Connect to Parks	» Shared road primarily » Multi-use path located on publicly owned property	» Creek crossing will be challenging	$593,000	LOW
RESOR ROAD WEST	Sidewalk	Connects neighborhoods to Pleasant Avenue	» Connect Neighborhoods » Connect to Parks	» Strong community support	» Slopes adjacent to road » Meeting driveway elevations » Right-of-way is limited	$472,000	MEDIUM
HUFFMAN PARK	Shared Road	Connects neighborhoods with Pleasant Avenue, Resor Road, Huffman Park and the aquatic center	» Connect Neighborhoods » Connect to Parks	» Shared road on wide street (Augusta Boulevard)	» Connection on John Gray to Huffman Park	$775,000	LOW
WINTON ROAD	Sidewalk	Connects neighborhoods to Creekside Middle School, Dixie Highway, Huffman Park and other routes	» Connect Neighborhoods » Connect to Major Destinations » Connect to Parks	» Filling in gaps of existing sidewalk » Mostly wide right-of-way	» Slopes adjacent to road » Utility poles	$2,049,000	MEDIUM
RESOR ROAD EAST	Shared Road	Provides bicycle connection from east side to west side of the city	» Connect Neighborhoods » Connect to Parks	» Shared lane easier to implement » Strong community support	» Resor Road traffic	$44,000	MEDIUM

IMPLEMENTATION FRAMEWORK

ROUTE	FACILITY TYPES INCLUDED	DESCRIPTION	GOALS MET	CONTRIBUTING FACTORS	BARRIERS TO IMPLEMENTATION	PRELIMINARY COST ESTIMATE	PRIORITY
SOUTH GILMORE ROAD	Sidewalk	Provides sidewalk connections between Route 4, neighborhoods, and major employers like Mercy Health	» Connect Neighborhoods » Connect to Major Destinations	» Filling in gaps in largely complete sidewalk network	» Slopes adjacent to road » Utility poles	$649,000	MEDIUM
SOUTHEAST ROUTE	Sidewalk Shared Road	Promotes walkability in southeast portion of city	» Connect Neighborhoods » Connect to Major Destinations » Connect to Parks	» Filling in gaps in largely complete sidewalk network » Strong community support	» Connections from this area to the major corridors around it	$637,000	MEDIUM
MIAMI TO MIAMI TRAIL	Multi-Use Path	Fairfield's segment of the Miami to Miami Trail connecting the Fairfield-Hamilton border to Gilmore Ponds Preserve Metropark	» Improve Public Health » Connect to Existing Trails	» Publicly owned right-of-way » Regional support to complete Miami to Miami trail	» Strong competition for regional funding	$892,000	MEDIUM
DIXIE HIGHWAY NORTH	Sidewalk	Completing the sidewalk network on Dixie Highway north of Gilmore Road. Connecting schools with surrounding area	» Connect to Major Destinations » Connect Neighborhoods	» Support and desire from Fairfield City School District » Wide right-of-way » Largely complete sidewalk network » Strong community support	» Property ownership » Access management » Zoning code not conducive to sidewalk construction	$4,074,000	HIGH
DIXIE HIGHWAY SOUTH	Sidewalk	Developing a sidewalk network south of Gilmore Road on Dixie Highway	» Connect to Major Destinations	» Wide right-of-way » Strong community support » Support from schools to improve walking conditions for students	» Frequent driveway/parking access points » Willing property owners » Zoning code not conducive to sidewalk construction » Open ditches vs. enclosed sewer system	$3,079,000	HIGH
SEWARD ROAD NORTH	Multi-Use Path	Multi-Use path connecting Miller's Run subdivision to Miami to Miami Trail	» Connect to Existing Trail » Connect Neighborhoods	» Wide right-of-way » Easy, direct connection to major existing trail	» Likely dependent on development on sites adjacent to Seward Road.	$170,000	MEDIUM
SEWARD ROAD SOUTH	Bike Lane	Bike lanes along Seward Road providing connections to employment opportunities	» Connect to Major Destinations	» Room for bike lanes on existing road. » Support for improved connectivity to local employers	» Minimal barriers	$141,000	LOW

Attachment: 2020 Fairfield Connects Final Report - Low resolution (1627 : Adoption of Fairfield Connects - Citywide Active Transportation Plan)

IMPLEMENTATION STRATEGY

Policy Recommendations

Create a Complete List of Necessary Facilities:

This document is a comprehensive overview of all sidewalks, multi-use paths, and bike lanes within the city, but it is not exhaustive. It is recommended that city staff identify and maintain a complete list of all active transportation facilities that the city would pursue building itself or require to be built by a developer. This complete list shall be approved with this plan and detailed in the city's GIS System. Future updates to this list should be reviewed in tandem with the periodic review of the comprehensive plan.

Define Responsibility of Maintenance:

The city has existing law requiring that property owners are responsible for the maintenance and repair of public sidewalk upon their property. It is recommended that the city revise and clarify ordinances related to sidewalk maintenance and repair responsibility (and other related ordinances) to include asphalt multi-use paths, concrete multi-use paths, and wide sidewalks. The repair, paving, and replacement of multi-use trails will generally be the responsibility of the city while sidewalks (including wide sidewalks) will generally be the responsibility of the property owner. Repaving of asphalt multi-use trails will be the responsibility of the city, while routine day-to-day maintenance (general upkeep) for all paved paths, regardless of width or material, will be the responsibility of the property owner.

Revise Ordinances Relating to New Development:

It is recommended that the city revise and clarify ordinances related to the requirement of constructing new sidewalk for public use along public streets to include provisions for constructing multi-use trails and/or sidewalks consistent with this plan. This may not be limited to just new public streets, but potentially could include public or private sidewalk/trail connections constructed as part of new development and redevelopment. New development should also be encouraged to connect private sidewalk to public paths to increase opportunities for healthy activities.

Fairfield codified ordinances currently require sidewalks be installed along public roads in most areas of the city. There are, however, several areas specifically exempted from these requirements. These existing sidewalk exceptions should be reviewed. At a minimum, the exemptions for State Route 4, Symmes Road, Holden Boulevard, and North Gilmore Road should be removed from Fairfield Codified Ordinance 1184.01.

Establish a Fee:

The city should consider a mechanism to impose a fee associated with new development under certain circumstances, such as in an area where the paved path should be constructed at a later date as a more comprehensive project. The city should establish a fee based on the length and type of required paved path to be paid to an Active Transportation Fund.

Establish Standard Construction Practices:

The Fairfield Connects Plan recommends the zoning code and all ordinances be reviewed to ensure that the widths, pavement thicknesses, and material types are consistent throughout the city. The minimum width for sidewalks will be 5 feet, but will be wider if adjacent to curb, walls, etc. The minimum width will be 10 feet for the Great Miami River Trail (the multi-use trail from Fairfield to Piqua) and the Miami to Miami Trail (the multi-use trail connecting the Little Miami Scenic Trail to the Great Miami River Trail). Other multi-use trails may be 8 to 10 feet in width but will be subject to staff recommendations as each route will have unique conditions.

Work with Local Schools, Neighboring Jurisdictions, and Other Organizations:

The city should work with local public and private schools to provide safe connections to schools. Bus stops for Fairfield City Schools will be considered when connecting to neighborhoods. Funding through the Safe Routes to Schools program will be investigated by the city for eligible projects.

The city will work with neighboring jurisdictions to promote regional connectivity whenever possible. Effort should be made to coordinate funding applications, to create inter-jurisdictional connections, and to ensure that Fairfield and the surrounding jurisdictions are working cooperatively toward a common goal. By working with Tri-State Trails, MetroParks of Butler County, and the adjacent cities and townships, the city will be able to make use of pooled resources and shared values.

Develop Bicycle Friendly Policies and Regulations:

The Fairfield Connects Plan recommends that the city review existing ordinances pertaining to bicycle riding on streets, sidewalks, and multi-use paths to ensure that city regulations encourage the public to be more active and to consider biking as a safe and viable transportation opportunity.

The city should develop practices to utilize both public and private opportunities to fund and encourage pedestrian and bicycle activity. This may include providing bike racks, benches, wayfinding, etc.

Create a Trail Priority Policy:

The priority of funding routes for construction will depend on a multitude of factors, including, but not limited to, the prioritization matrix included in the Fairfield Connects Plan. The regional trails (Great Miami River Trail and the Miami to Miami Trail) will likely be given higher priority based on availability of more outside funding opportunities and a greater number of anticipated initial users. Major internal routes such as River Road West and Pleasant Avenue South (for example) may be constructed (in whole or in part) if other development projects, construction projects, or funding priorities are introduced.

Seize Funding Opportunities:

It is recommended that City staff utilize all practical outside funding options to assist in the construction of sidewalks and multi-use paths shown in the Fairfield Connects Plan. Primary outside funding options include Community Development Block Grants (CDBG), Ohio Public Works Commission grants (OPWC), Ohio Kentucky Indiana Regional Council of Governments funding (OKI), Ohio Department of Transportation funding (ODOT), and Ohio Department of Natural Resources funding (ODNR). The grants and funding from these organizations generally require a substantial local match, typically at least 20 percent of the project cost. Projects may also be funded in conjunction with large roadway projects involving multiple modes of transportation.

Create Active Transportation Fund:

In order for the city to fund the required matches for projects or the entire cost of routes that may not be eligible for outside assistance, the city should create an Active Transportation Fund within the annual operating budget so that project resources can accumulate over time. In addition to annual appropriations, the city should consider opportunities for allocating other revenues such as development fees and charitable contributions in order to achieve specific project goals.

FUNDING SOURCES & STRATEGY

Funding Strategy

The city should pursue a capital improvement program that seeks to implement these recommended routes according to the priorities established in the plan and/or in coordination with other public infrastructure upgrades planned within these right-of-way corridors. Including these improvements as part of larger roadway, bridge or public utility infrastructure projects may allow for reduced construction costs through economies of scale, increased opportunities for outside grant funding and improved coordination of all project elements. Where feasible, it is recommended to implement the planned improvements as part of these larger capital improvements. Planning projects to avoid the need for additional right-of-way is recommended to simplify the coordination effort, reduce costs, and reduce the schedule for completion of construction. It is recommend that the city consider the following grant funded sources in addition to private foundation grants and local street, bridge, water, sewer and stormwater funds in the planning of these improvements.

Primary Funding Sources:

Transportation Alternatives (TA):
- Agency: Ohio-Kentucky-Indiana Regional Council of Governments (OKI)
- Approximate grant limit: $750,000 per project
- Funding participation: Grant available for up to 80% of preliminary engineering right-of-way, right of way acquisition, utility relocation, construction and construction engineering phases with higher points awarded for increased local match. Design phases are recommended to be 100% local
- Requirements or recommendations: Applications are due annually in June with construction funding planned for 4 years in advance.

Surface Transportation Block Grant (STBG):
- Agency: Ohio-Kentucky-Indiana Regional Council of Governments (OKI)
- Approximate grant limit: $6,000,000 per project
- Funding participation: Grant available for up to 80% of preliminary engineering right-of-way, right of way acquisition, utility relocation, construction and construction engineering phases with higher points awarded for increased local match. Design phases are recommended to be 100% local.
- Requirements or recommendations: Applications are due annually in June with construction funding planned for 4 years in advance. Improvements on roadways or right of way corridors are only eligible if on functionally classified network.

Highway Safety Improvement Program (HSIP):
- Agency: Ohio Department of Transportation (ODOT)
- Approximate grant limit: $3,000,000 per project
- Funding participation: Grant available for up to 90% of all phases of the project. In 2020, funding grant limits were increased to 100% of all phases.
- Requirements or recommendations: Completed safety study or evaluation of the infrastructure gap analysis similar to that completed in this study. As a result of bike/ped crash rates increasing faster than vehicular crashes in the state, increased emphasis has been placed on bicycle and pedestrian improvements that can be implemented quickly despite low project evaluation scores in applications.

Clean Ohio Trail Fund (COTF):
- Agency: Ohio Department of Natural Resources (ODNR)
- Approximate grant limit: $500,000 per project
- Funding participation: Grant available for up to 75% of all phases of the project.
- Requirements or recommendations: Program is intended for trails outside of roadway right of way that link population centers with outdoor recreation areas, preserve natural corridors, or create links in urban areas to commuter access & has economic benefits. Projects must be complete within 15 months.

Safe Routes to School (SRTS):
- Agency: Ohio Department of Transportation (ODOT)
- Approximate grant limit: $400,000 per project
- Funding participation: Grant available for up to 100% of all phases of the project.
- Requirements or recommendations: Infrastructure improvements must be within 2 miles of a K-8 school with an approved SRTS Travel Plan. The completion of the plan may be solicited from ODOT for free to the local districts as well.

Other Funding Sources:

Recreational Trails Program (RTP):
- Agency: Ohio Department of Natural Resources (ODNR)
- Requirements or recommendations: Grant available for up to 80% of all phases of the project costs with awards capped at $150,000 per project. Project must be complete within 15 months.

Congestion Mitigation and Air Quality (CMAQ):
- Agency: Ohio-Kentucky-Indiana Regional Council of Governments (OKI)
- Requirements or recommendations: Applications are due bi-annually in June with construction funding planned for 4 years in advance. Projects should contribute to the reduction of vehicular emissions by reducing idle time or removing vehicular trips by increasing active transportation options.

Municipal Bridge Program:
- Agency: Ohio Department of Transportation (ODOT)
- Requirements or recommendations: May be appropriate source to address challenging stream, railroad or street crossing locations in which the existing bridge is a bottleneck for bike/pedestrian infrastructure and is in need of structural repairs.

State Capital Improvement Program (STIP) / Local Transportation Improvement Program (LTIP):
- Agency: Ohio Public Works Commission (OPWC) District 10
- Requirements or recommendations: Program is not eligible for bicycle and pedestrian infrastructure only projects. Could be used as local match for funding sources above that make improvements to roadway, bridge or utility infrastructure along the same corridor. Both grant and long-term, low-interest loans options are available.

Urban Paving Program:
- Agency: Ohio Department of Transportation (ODOT)
- Requirements or recommendations: Funding for surface course pavement improvements and pavement markings on locally-maintained state routes that may allow for the reallocation of the existing pavement width to accommodate bicycle facilities or enhance pedestrian crosswalks.

ORDINANCE NO. _____

ORDINANCE TO APPROVE AND ADOPT THE FAIRFIELD CONNECTS-CITYWIDE ACTIVE TRANSPORTATION PLAN AS PART OF THE CITY OF FAIRFIELD, OHIO COMPREHENSIVE PLAN.

BE IT ORDAINED by the Council of the City of Fairfield, Ohio, that:

Section 1. The Fairfield Connects-Citywide Active Transportation Plan, a copy of which is on file in the office of the Clerk of Council, is hereby approved and adopted as part of the Comprehensive Plan of the City of Fairfield, Ohio.

Section 2. This Ordinance shall take effect at the earliest period allowed by law.

Passed _____ _____
Mayor's Approval

Posted _____

First Reading _____ Rules Suspended _____

Second Reading _____

Third Reading _____

ATTEST:

_____
Clerk of Council

This is to certify that this Ordinance has been duly published by posting and summary publication as provided by Charter.

_____
Clerk of Council

Active Clients\City of Fairfield\Ordinances\2020\Fairfield Connects-Ord

Attachment: Fairfield Connects-Ord (1627 : Adoption of Fairfield Connects - Citywide Active Transportation Plan)

City Council Ordinance
Regular Meeting - September 28, 2020

Submitted by: Ben Mann,
Submitting Department: Public Works

Subject:
OPWC Issue 1 - Grant Application for 2022 Street Improvement Program

Legislation Title:
Ordinance to authorize the City Manager to execute an Ohio Public Works Commission (OPWC) Issue 1 - Grant Application and Agreement for 2022 Street Improvement Program and declaring an emergency.

Recommendation:
It is recommended that City Council authorize the preparation of legislation authorizing the City Manager to execute and file the application for financial assistance, and enter into an agreement with the Ohio Public Works Commission (OPWC) for a grant to fund a portion of the 2022 Street Improvement Program.

Background/Synopsis:

It is necessary for City Council to authorize the City Manager to execute a grant application with OPWC for financial assistance for the 2022 Street Improvement Program including asphalt and concrete contracts. This project is for a portion of the rehabilitation of nearly 24 lane miles of City streets with the 2022 program.

This project includes reconstructing portions of curb, curb ramps, casting adjustments for multiple utilities, guardrail replacement on Bobmeyer Road, base failure repairs, milling, overlay, etc. The project will address deficient asphalt and concrete on many streets throughout the City.

This project is scheduled to bid in the winter of 2021 and construction will begin in early 2022.

This project is programmed in the current 2020-2024 CIP as 2PW06 and 2PW07. If approved, OPWC District 10 would be funding $785,000 of the project. The City share would be well over 50% of this project. Asphalt and concrete for street improvements next year will approach or exceed $3 million.

Financial Impact:

No immediate financial impact.

Emergency Provision Explanation:

The final application is due by October 9th, therefore a suspension of the rules and emergency

provision are being requested.

Rule Suspension Requested:
Yes

Emergency Provision Needed:
Yes

Attachments:
1. 2022 OPWC Overlay Map
2. Ohio Public Works Commission-Ord

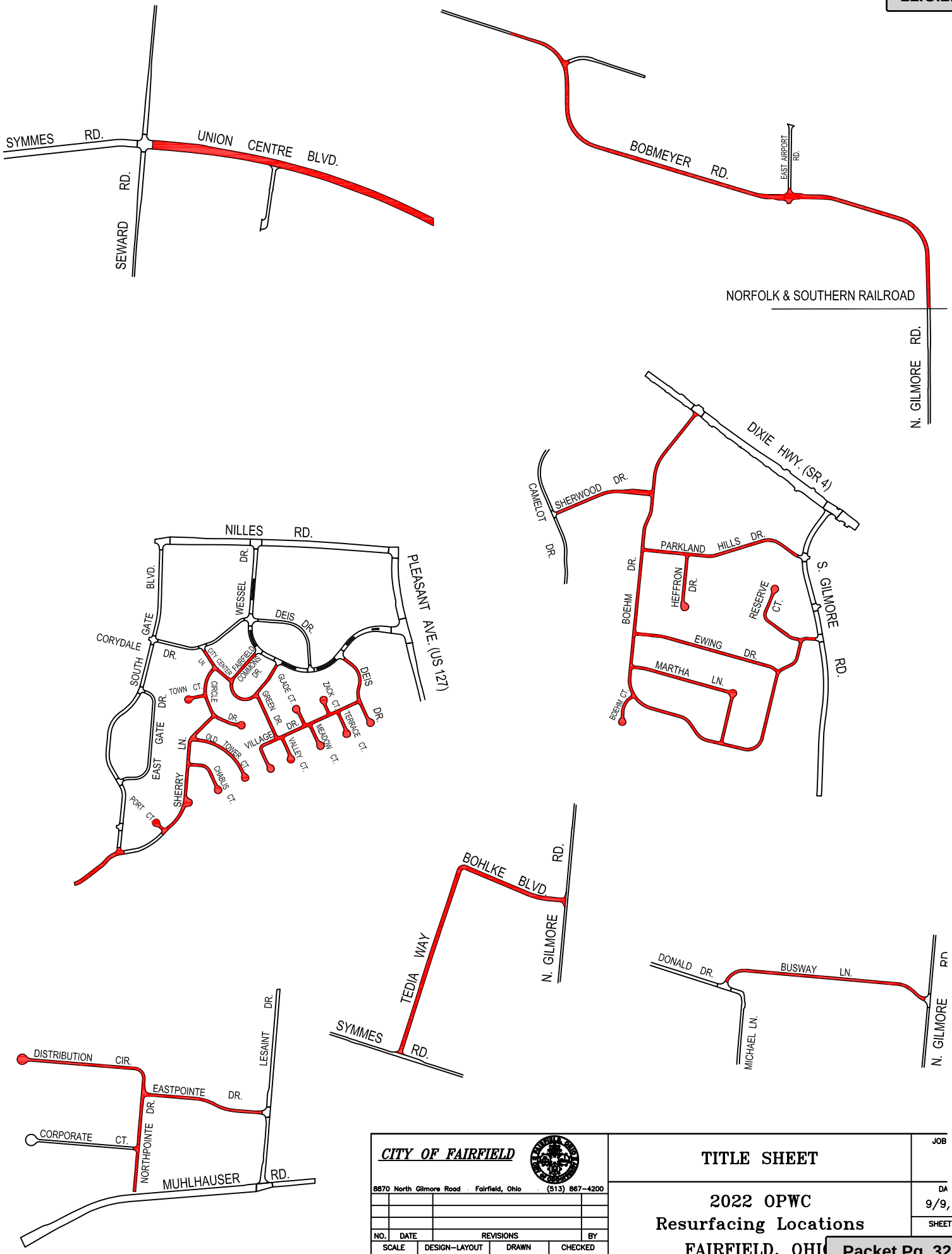

Attachment: 2022 OPWC Overlay Map (1625 : OPWC Issue 1 - Grant Application for 2022 Street Improvement Program)

ORDINANCE NO. _____

ORDINANCE TO AUTHORIZE THE CITY MANAGER TO EXECUTE AND FILE AN OHIO PUBLIC WORKS COMMISSION (OPWC) ISSUE 1 - GRANT APPLICATION AND AGREEMENT FOR THE 2022 STREET IMPROVEMENT PROGRAM AND DECLARING AN EMERGENCY.

BE IT ORDAINED by the Council of the City of Fairfield, Ohio, that:

Section 1. The City Manager is hereby authorized to execute and file an Ohio Public Works Commission (OPWC) Issue 1 - grant application and agreement for the 2022 Street Improvement Program in accordance with the application and agreement on file in the office of the City Manager.

Section 2. This Ordinance is hereby declared to be an emergency measure necessary for the urgent benefit and protection of the City and its inhabitants for the reason that the grant application is due October 9, 2020; wherefore, this ordinance shall take effect immediately upon its passage.

Passed _____ _____
Mayor's Approval

Posted _____

First Reading _____ Rules Suspended _____

Second Reading _____ Emergency _____

Third Reading _____

ATTEST:

_____
Clerk of Council

This is to certify that this Ordinance has been duly published by posting and summary publication as provided by Charter.

_____
Clerk of Council

Active Clients\City of Fairfield\Ordinances\2020\Ohio Public Works Commission-Ord

Attachment: Ohio Public Works Commission-Ord (1625 : OPWC Issue 1 - Grant Application for 2022 Street Improvement Program)

City Council Ordinance
Regular Meeting - September 28, 2020

Submitted by: Adam Sackenheim,
Submitting Department: Public Utilities

Subject:
Ordinance to update water and sewer rates and utility expansion fees

Legislation Title:
Ordinance to amend subsection 921.03(g), Expansion and Water Tap Fees, section 921.08, Water Rates, and subsections 925.05(e)(2) Sewer Expansion Fees and 925.08(b)(1) Sewer User Rates of Ordinance No. 166-84, the Codified Ordinances of Fairfield, Ohio.

Recommendation:
It is recommended that City Council authorize an amendment of the rates charged for water expansion and water service under Chapter 921.08 (appendices A to E) of the Codified Ordinances of the City of Fairfield, Ohio, as well as an amendment of the rates charged for sewer expansion and sewer service under Chapter 925.05(e), and Chapter 925.08(b) and Tables A to D of the Codified Ordinances of the City of Fairfield, Ohio.

Background/Synopsis:

Current water and sewer rates were established in 2017, and extend through 2020.

In the summer of 2020, City staff worked with financial consultants from Stantec to develop a comprehensive financial plan and prepare recommended utility rate adjustments for years 2021 through 2025. Findings and rate recommendations from this work were presented to City Council on 9/14/2020, and Stantec's final technical report is attached here for review.

The recommended water and sewer rate increases will assure long-term financial stability for the Public Utilities Department and provide revenue for critical infrastructure maintenance, while at the same time keeping rates stable and extremely competitive relative to other municipal utility operators in Southwest Ohio.

The recommended rate increases include increases to both user fees and infrastructure surcharge fees (see attached). City staff also recommends elimination of the existing 'multi-family' water rate schedule and conversion of this user classification to the standard residential / commercial schedule for consistency and equity. City staff also recommends an adjustment to both the water and sewer expansion fees.

The table below summarizes the proposed water and sewer user fee and infrastructure surcharge fee changes, as well as the impact of the changes on the average Fairfield utility customer:

	FY 2020	FY 2021	FY 2022	FY 2023	FY 2024	FY 2025
Water Rate Increase**	-	3.50%	3.50%	3.50%	3.50%	3.50%
Water Infrastructure fee Increase (per kgal)	-	$0.05	$0.10	$0.10	$0.00	$0.05
Sewer Rate Increase	-	1.50%	1.50%	1.50%	1.50%	3.00%
Sewer Infrastructure fee Increase (per kgal)	-	$0.05	$0.00	$0.00	$0.10	$0.00
Avg. Monthly Residential Bill (5,000 gal)	$52.53	$54.17	$55.82	$57.50	$59.24	$61.19
$ Change	**-**	**$1.64**	**$1.65**	**$1.68**	**$1.74**	**$1.95**
% Change	**-**	**3.1%**	**3.0%**	**3.0%**	**3.0%**	**3.3%**

The table below summarizes proposed expansion fee changes for new customers connecting to the City of Fairfield utility system:

Water

Meter Size	Current Equivalency Factors	Current Expansion Fees	Calculated Expansion Fees - Current Equivalency Factors	$ Difference
5/8"	1.00	$ 800	$ 1,530	$ 730
3/4"	1.00	$ 800	$ 1,530	$ 730
1"	1.40	$ 1,120	$ 2,142	$ 1,022
1.5"	2.00	$ 1,596	$ 3,052	$ 1,456
2"	2.90	$ 2,320	$ 4,437	$ 2,117
3"	11.00	$ 8,800	$ 16,830	$ 8,030
4"	14.00	$ 11,200	$ 21,420	$ 10,220
5"	21.00	$ 16,800	$ 32,130	$ 15,330
6"	29.00	$ 23,200	$ 44,370	$ 21,170

Sewer

Meter Size	Current Equivalency Factors	Current Expansion Fees	Calculated Expansion Fees - Current Equivalency Factors	$ Difference
5/8"	1.00	$ 1,690	$ 2,200	$ 510
3/4"	1.00	$ 1,690	$ 2,200	$ 510
1"	1.40	$ 2,366	$ 3,080	$ 714
1.5"	1.80	$ 3,042	$ 3,960	$ 918
2"	2.90	$ 4,901	$ 6,380	$ 1,479
3"	11.00	$ 18,590	$ 24,200	$ 5,610
4"	14.00	$ 23,660	$ 30,800	$ 7,140
5"	21.00	$ 35,490	$ 46,200	$ 10,710
6"	29.00	$ 49,010	$ 63,800	$ 14,790

Financial Impact:

The financial impact of these recommended adjustments will be the assurance of continued

financial stability and transparency for the Public Utilities Department – so that the Department can continue to fulfill its mission by:

- Protecting public health;
- Protecting public safety; and
- Protecting the environment.

Emergency Provision Explanation:

Not applicable.

Rule Suspension Requested:
No

Emergency Provision Needed:
No

Attachments:
1. 2021-2025 Water expansion fees and rates
2. 2021-2025 Sewer expansion fees and rates
3. Water and Sewer Rates-Ord
4. Exhibit A

Appendix A
Water Expansion Fee Rates:

Meter Size	Current Equivalency Factors	Current Expansion Fees	Calculated Expansion Fees	Source of Supply/Treatment	Distribution/ Transmission
5/8"	1.00	$ 800	$ 1,530	$ 1,100	$ 430
3/4"	1.00	$ 800	$ 1,530	$ 1,100	$ 430
1"	1.40	$ 1,120	$ 2,142	$ 1,540	$ 602
1.5"	2.00	$ 1,596	$ 3,052	$ 2,195	$ 858
2"	2.90	$ 2,320	$ 4,437	$ 3,190	$ 1,247
3"	11.00	$ 8,800	$ 16,830	$ 12,100	$ 4,730
4"	14.00	$ 11,200	$ 21,420	$ 15,400	$ 6,020
5"	21.00	$ 16,800	$ 32,130	$ 23,100	$ 9,030
6"	29.00	$ 23,200	$ 44,370	$ 31,900	$ 12,470

Appendices B through F:
Water Rates:

Effective 1/1/2021

Meter Size (Inches)	**Monthly Gallons Minimum**	**Monthly Gallons Surcharge**	**Over Minimum**	**Monthly Minimum Charge**
3/4	3,000 @ $4.42	$0.50	$4.00	$14.76
1	6,000 @ $4.42	$0.50	$4.00	$29.52
1-1/2	10,000 @ $4.42	$0.50	$4.00	$49.20
2	20,000 @ $4.42	$0.50	$4.00	$98.40
3	45,000 @ $4.42	$0.50	$4.00	$221.40
4	80,000 @ $4.42	$0.50	$4.00	$393.60
6	180,000 @ $4.42	$0.50	$4.00	$885.60
8	240,000 @ $4.42	$0.50	$4.00	$1,180.80

Effective 1/1/2022

Meter Size (Inches)	Monthly Gallons Minimum	Monthly Gallons Surcharge	Over Minimum	Monthly Minimum Charge
3/4	3,000 @ $4.57	$0.60	$4.14	$15.51
1	6,000 @ $4.57	$0.60	$4.14	$31.02
1-1/2	10,000 @ $4.57	$0.60	$4.14	$51.70
2	20,000 @ $4.57	$0.60	$4.14	$103.40
3	45,000 @ $4.57	$0.60	$4.14	$232.65
4	80,000 @ $4.57	$0.60	$4.14	$413.60
6	180,000 @ $4.57	$0.60	$4.14	$930.60
8	240,000 @ $4.57	$0.60	$4.14	$1,240.80

Effective 1/1/2023

Meter Size (Inches)	Monthly Gallons Minimum	Monthly Gallons Surcharge	Over Minimum	Monthly Minimum Charge
3/4	3,000 @ $4.73	$0.70	$4.28	$16.29
1	6,000 @ $4.73	$0.70	$4.28	$32.58
1-1/2	10,000 @ $4.73	$0.70	$4.28	$54.30
2	20,000 @ $4.73	$0.70	$4.28	$108.60
3	45,000 @ $4.73	$0.70	$4.28	$244.35
4	80,000 @ $4.73	$0.70	$4.28	$434.40
6	180,000 @ $4.73	$0.70	$4.28	$977.40
8	240,000 @ $4.73	$0.70	$4.28	$1,303.20

Effective 1/1/2024

Meter Size (Inches)	Monthly Gallons Minimum	Monthly Gallons Surcharge	Over Minimum	Monthly Minimum Charge
3/4	3,000 @ $4.90	$0.70	$4.43	$16.80
1	6,000 @ $4.90	$0.70	$4.43	$33.60
1-1/2	10,000 @ $4.90	$0.70	$4.43	$56.00
2	20,000 @ $4.90	$0.70	$4.43	$112.00
3	45,000 @ $4.90	$0.70	$4.43	$252.00
4	80,000 @ $4.90	$0.70	$4.43	$448.00
6	180,000 @ $4.90	$0.70	$4.43	$1,008.00
8	240,000 @ $4.90	$0.70	$4.43	$1,344.00

Effective 1/1/2025

Meter Size (Inches)	Monthly Gallons Minimum	Monthly Gallons Surcharge	Over Minimum	Monthly Minimum Charge
3/4	3,000 @ $5.07	$0.75	$4.59	$17.46
1	6,000 @ $5.07	$0.75	$4.59	$34.92
1-1/2	10,000 @ $5.07	$0.75	$4.59	$58.20
2	20,000 @ $5.07	$0.75	$4.59	$116.40
3	45,000 @ $5.07	$0.75	$4.59	$261.90
4	80,000 @ $5.07	$0.75	$4.59	$465.60
6	180,000 @ $5.07	$0.75	$4.59	$1,047.60
8	240,000 @ $5.07	$0.75	$4.59	$1,396.80

925.05(e)(2)
Sewer Expansion Fee Rates:

Meter Size	Current Equivalency Factors	Current Expansion Fees	Calculated Expansion Fees	Collection/ Conveyance	Treatment/ Disposal
5/8"	1.00	$ 1,690	$ 2,200	$ 700	$ 1,500
3/4"	1.00	$ 1,690	$ 2,200	$ 700	$ 1,500
1"	1.40	$ 2,366	$ 3,080	$ 980	$ 2,100
1.5"	1.80	$ 3,042	$ 3,960	$ 1,260	$ 2,700
2"	2.90	$ 4,901	$ 6,380	$ 2,030	$ 4,350
3"	11.00	$ 18,590	$ 24,200	$ 7,700	$ 16,500
4"	14.00	$ 23,660	$ 30,800	$ 9,800	$ 21,000
5"	21.00	$ 35,490	$ 46,200	$ 14,700	$ 31,500
6"	29.00	$ 49,010	$ 63,800	$ 20,300	$ 43,500

Sewer Rates
Table A:
Effective 1/1/2021

Meter Size (Inches)	**Monthly Gallons Minimum**	**Monthly Gallons Surcharge**	**Over Minimum**	**Monthly Minimum Charge**
3/4	3,000 @ $5.58	$0.50	$5.58	$18.24
1	6,000 @ $5.58	$0.50	$5.58	$36.48
1-1/2	10,000 @ $5.58	$0.50	$5.58	$60.80
2	20,000 @ $5.58	$0.50	$5.58	$121.60
3	45,000 @ $5.58	$0.50	$5.58	$273.60
4	80,000 @ $5.58	$0.50	$5.58	$486.40
6	180,000 @ $5.58	$0.50	$5.58	$1,094.40
8	240,000 @ $5.58	$0.50	$5.58	$1,459.20

Table B:

Effective 1/1/2022

Meter Size (Inches)	**Monthly Gallons Minimum**	**Monthly Gallons Surcharge**	**Over Minimum**	**Monthly Minimum Charge**
3/4	3,000 @ $5.66	$0.50	$5.66	$18.48
1	6,000 @ $5.66	$0.50	$5.66	$36.96
1-1/2	10,000 @ $5.66	$0.50	$5.66	$61.60
2	20,000 @ $5.66	$0.50	$5.66	$123.20
3	45,000 @ $5.66	$0.50	$5.66	$277.20
4	80,000 @ $5.66	$0.50	$5.66	$492.80
6	180,000 @ $5.66	$0.50	$5.66	$1,108.80
8	240,000 @ $5.66	$0.50	$5.66	$1,478.40

Table C:

Effective 1/1/2023

Meter Size (Inches)	**Monthly Gallons Minimum**	**Monthly Gallons Surcharge**	**Over Minimum**	**Monthly Minimum Charge**
3/4	3,000 @ $5.74	$0.50	$5.74	$18.72
1	6,000 @ $5.74	$0.50	$5.74	$37.44
1-1/2	10,000 @ $5.74	$0.50	$5.74	$62.40
2	20,000 @ $5.74	$0.50	$5.74	$124.80
3	45,000 @ $5.74	$0.50	$5.74	$280.80
4	80,000 @ $5.74	$0.50	$5.74	$499.20
6	180,000 @ $5.74	$0.50	$5.74	$1,123.20
8	240,000 @ $5.74	$0.50	$5.74	$1,497.60

Table D:

Effective 1/1/2024

Meter Size (Inches)	**Monthly Gallons Minimum**	**Monthly Gallons Surcharge**	**Over Minimum**	**Monthly Minimum Charge**
3/4	3,000 @ $5.83	$0.60	$5.83	$19.29
1	6,000 @ $5.83	$0.60	$5.83	$38.58
1-1/2	10,000 @ $5.83	$0.60	$5.83	$64.30
2	20,000 @ $5.83	$0.60	$5.83	$128.60
3	45,000 @ $5.83	$0.60	$5.83	$289.35
4	80,000 @ $5.83	$0.60	$5.83	$514.40
6	180,000 @ $5.83	$0.60	$5.83	$1,157.40
8	240,000 @ $5.83	$0.60	$5.83	$1,543.20

Table E:

Effective 1/1/2025

Meter Size (Inches)	**Monthly Gallons Minimum**	**Monthly Gallons Surcharge**	**Over Minimum**	**Monthly Minimum Charge**
3/4	3,000 @ $6.00	$0.60	$6.00	$19.80
1	6,000 @ $6.00	$0.60	$6.00	$39.60
1-1/2	10,000 @ $6.00	$0.60	$6.00	$66.00
2	20,000 @ $6.00	$0.60	$6.00	$132.00
3	45,000 @ $6.00	$0.60	$6.00	$297.00
4	80,000 @ $6.00	$0.60	$6.00	$528.00
6	180,000 @ $6.00	$0.60	$6.00	$1,188.00
8	240,000 @ $6.00	$0.60	$6.00	$1,584.00

ORDINANCE NO. _____

ORDINANCE TO AMEND SUBSECTION 921.03(g), EXPANSION AND WATER TAP FEES, SECTION 921.08, WATER RATES, AND SUBSECTIONS 925.05(e)(2) SEWER EXPANSION FEES AND 925.08(b)(1) SEWER USER RATES OF ORDINANCE NO. 166-84, THE CODIFIED ORDINANCES OF FAIRFIELD, OHIO.

BE IT ORDAINED by the Council of the City of Fairfield, Ohio, that:

Section 1. Subsection 921.03(g), Expansion And Water Tap Fees, Section 921.08, Water Rates, and Subsections 925.05(e)(2), Sewer Expansion Fees and 925.08(b)(1) Sewer User Rates of Ordinance No. 166-84, The Codified Ordinances of Fairfield, Ohio are hereby amended to read as follows:

SEE ATTACHED EXHIBIT "A"

Section 2. This Ordinance shall take effect at the earliest period allowed by law.

Passed _____ _____
Mayor's Approval

Posted _____

First Reading _____ Rules Suspended _____

Second Reading _____

Third Reading _____

ATTEST:

_____
Clerk of Council

This is to certify that this Ordinance has been duly published by posting and summary publication as provided by Charter.

_____
Clerk of Council

Active Clients\City of Fairfield\Ordinances\2020\Water and Sewer Rates-Ord

Attachment: Water and Sewer Rates-Ord (1631 : Ordinance to update water and sewer rates and utility expansion fees)

921.03 APPLICATION FOR CONNECTION.

[No changes until paragraph (g).]

(g) Expansion and Water Tap Fees. Expansion fees for properties located inside the corporate limits of the City are hereby established in accordance with Appendix A which is attached **[~~to Ordinance 53-91~~]** and incorporated herein as Appendix A. No building permit shall be issued until a water expansion fee is paid. Water expansion fees for properties located outside the corporate limits of the City shall be one hundred and fifty percent (150%) of the amounts stated in Appendix A. A tap fee shall be paid at the time of application by anyone tapping into the City's water system. The tap fee is for payment of materials supplied by the City for the physical service connection at the public water main. The cost of materials shall be 1.5 times the City's cost of purchasing the material. **[~~(Ord. 84-14. Passed 9-8-14.)~~]**

EXHIBIT "A"

PAGE 1

Attachment: Exhibit A [Revision 1] (1631 : Ordinance to update water and sewer rates and utility expansion fees)

921.08 WATER RATES.

Water rates and minimum charges for customers located within the corporate limits of the City are hereby established as shown in Appendices B, C, D**, [~~and~~]** E **AND F** which are incorporated herein by reference. Existing Appendix **[~~F~~] E** water rates shall remain in effect until **[~~April 1, 2017~~] JANUARY 1, 2021**. Water rates and minimum charges shall be calculated on a monthly basis. Water customers located outside the corporate limits of the City shall be billed under the rates established in Appendices B, C, D**, [~~and~~]** E **AND F**, plus an additional fifty percent (50%) of each monthly bill. In-City residential water customers of the City of Fairfield who are provided wastewater treatment service by an entity other than the City of Fairfield shall be allowed a monthly credit against their monthly water charges so that their total water and wastewater charges are the same as those paid by in-City residential customers who use both City of Fairfield water and wastewater service, provided that such credit shall not exceed the actual amount of the customer's water charges in any month. The Finance Director is authorized and directed to calculate and apply the credit as described herein.
(Ord. 9-17. Passed 2-27-17.)

EXHIBIT "A"
PAGE 2

Attachment: Exhibit A [Revision 1] (1631 : Ordinance to update water and sewer rates and utility expansion fees)

APPENDIX A

Water Expansion Fee Rates

~~Water Meter Size~~	~~Equivalent Residential Unit (ERU)~~	~~Water * Expansion Fee~~
~~5/8"~~	~~1.0~~	~~$ 800~~
~~1"~~	~~1.4~~	~~1,120~~
~~1-1/2"~~	~~1.8~~	~~1,596~~
~~2"~~	~~2.9~~	~~2,320~~
~~3"~~	~~11.0~~	~~8,800~~
~~4"~~	~~14.0~~	~~11,200~~
~~5"~~	~~21.0~~	~~16,800~~
~~6"~~	~~29.0~~	~~23,200~~

Water Meter Size	**Equivalent Residential Unit (ERU)**	**Treatment Plant**	**Distribution System**	**Total Water* Expansion Fee**
5/8" and 3/4"	**1.0**	**$1,100**	**$430**	**$1,530**
1"	**1.4**	**$1,540**	**$602**	**$2,142**
1.5"	**1.8**	**$2,195**	**$858**	**$3,052**
2"	**2.9**	**$3,190**	**$1,247**	**$4,437**
3"	**11.0**	**$12,100**	**$4,730**	**$16,830**
4"	**14.0**	**$15,400**	**$6,020**	**$21,420**
5"	**21.0**	**$23,100**	**$9,030**	**$32,130**
6"	**29.0**	**$31,900**	**$12,470**	**$44,370**

* For irrigation, process water, fire suppression systems and other non-sanitary sewer disposal uses, expansion fee shall be as follows:

Service Size	Water Expansion Fee
3/4-1"	$ 625.00
1-1/2-4"	1,000.00
Above 4"	1,250.00

[~~(Ord. 53-91. Passed 5-3-91.)~~]

EXHIBIT "A"

PAGE 3

Attachment: Exhibit A [Revision 1] (1631 : Ordinance to update water and sewer rates and utility expansion fees)

APPENDIX B
WATER RATES

Effective [~~April 1, 2017 – Residential~~] JANUARY 1, 2021

~~Meter Size (inches)~~	~~Monthly Gallons Minimum~~	~~Monthly Gallons Surcharge~~	~~Over Minimum~~	~~Monthly Minimum Charge~~
~~3/4~~	~~3,000 @ $3.33~~	~~$0.35~~	~~$3.01~~	~~$11.05~~
~~1~~	~~6,000 @ $3.33~~	~~$0.35~~	~~$3.01~~	~~$22.10~~
~~1-1/2~~	~~10,000 @ $3.33~~	~~$0.35~~	~~$3.01~~	~~$36.83~~
~~2~~	~~20,000 @ $3.33~~	~~$0.35~~	~~$3.01~~	~~$73.66~~
~~3~~	~~45,000 @ $3.33~~	~~$0.35~~	~~$3.01~~	~~$165.74~~
~~4~~	~~80,000 @ $3.33~~	~~$0.35~~	~~$3.01~~	~~$294.64~~
~~6~~	~~180,000 @ $3.33~~	~~$0.35~~	~~$3.01~~	~~$662.94~~
~~8~~	~~240,000 @ $3.33~~	~~$0.35~~	~~$3.01~~	~~$883.92~~

~~Effective April 1, 2017 - Multi-Family~~

~~Meter Size (inches)~~	~~Monthly Service Charge~~	~~Monthly Gallons Surcharge~~	~~1,000 Gallons Used~~	~~Minimum Charge~~
~~3/4~~	~~$5.12~~	~~$0.35~~	~~$3.01~~	~~$15.21~~
~~1~~	~~$5.12~~	~~$0.35~~	~~$3.01~~	~~$25.30~~
~~1-1/2~~	~~$5.12~~	~~$0.35~~	~~$3.01~~	~~$38.76~~
~~2~~	~~$5.12~~	~~$0.35~~	~~$3.01~~	~~$72.40~~
~~3~~	~~$5.12~~	~~$0.35~~	~~$3.01~~	~~$156.50~~
~~4~~	~~$5.12~~	~~$0.35~~	~~$3.01~~	~~$274.24~~
~~6~~	~~$5.12~~	~~$0.35~~	~~$3.01~~	~~$610.64~~
~~8~~	~~$5.12~~	~~$0.35~~	~~$3.01~~	~~$812.48~~

~~(Ord. 9-17. Passed 2-27-17.)~~

Meter Size (Inches)	Monthly Gallons Minimum	Monthly Gallons Surcharge	Over Minimum	Monthly Minimum Charge
3/4	3,000 @ $4.42	$0.50	$4.00	$14.76
1	6,000 @ $4.42	$0.50	$4.00	$29.52
1-1/2	10,000 @ $4.42	$0.50	$4.00	$49.20
2	20,000 @ $4.42	$0.50	$4.00	$98.40
3	45,000 @ $4.42	$0.50	$4.00	$221.40
4	80,000 @ $4.42	$0.50	$4.00	$393.60

EXHIBIT "A"
PAGE 4

Attachment: Exhibit A [Revision 1] (1631 : Ordinance to update water and sewer rates and utility expansion fees)

6	180,000 @ $4.42	$0.50	$4.00	$885.60
8	240,000 @ $4.42	$0.50	$4.00	$1,180.80

EXHIBIT "A"
PAGE 5

APPENDIX C
WATER RATES

Effective [~~January 1, 2018 – Residential~~] JANUARY 1, 2022

~~Meter Size (inches)~~	~~Monthly Gallons Minimum~~	~~Monthly Gallons Surcharge~~	~~Over Minimum~~	~~Monthly Minimum Charge~~
~~3/4~~	~~3,000 @ $3.77~~	~~$0.45~~	~~$3.41~~	~~$12.65~~
~~1~~	~~6,000 @ $3.77~~	~~$0.45~~	~~$3.41~~	~~$25.30~~
~~1-1/2~~	~~10,000 @ $3.77~~	~~$0.45~~	~~$3.41~~	~~$42.16~~
~~2~~	~~20,000 @ $3.77~~	~~$0.45~~	~~$3.41~~	~~$84.33~~
~~3~~	~~45,000 @ $3.77~~	~~$0.45~~	~~$3.41~~	~~$189.73~~
~~4~~	~~80,000 @ $3.77~~	~~$0.45~~	~~$3.41~~	~~$337.30~~
~~6~~	~~180,000 @ $3.77~~	~~$0.45~~	~~$3.41~~	~~$758.93~~
~~8~~	~~240,000 @ $3.77~~	~~$0.45~~	~~$3.41~~	~~$1,011.91~~

~~Effective January 1, 2018 – Multi-Family~~

~~Meter Size (inches)~~	~~Monthly Service Charge~~	~~Monthly Gallons Surcharge~~	~~1,000 Gallons Used~~	~~Minimum Charge~~
~~3/4~~	~~$5.78~~	~~$0.45~~	~~$3.41~~	~~$17.35~~
~~1~~	~~$5.78~~	~~$0.45~~	~~$3.41~~	~~$28.91~~
~~1-1/2~~	~~$5.78~~	~~$0.45~~	~~$3.41~~	~~$44.34~~
~~2~~	~~$5.78~~	~~$0.45~~	~~$3.41~~	~~$82.90~~
~~3~~	~~$5.78~~	~~$0.45~~	~~$3.41~~	~~$179.29~~
~~4~~	~~$5.78~~	~~$0.45~~	~~$3.41~~	~~$314.25~~
~~6~~	~~$5.78~~	~~$0.45~~	~~$3.41~~	~~$699.83~~
~~8~~	~~$5.78~~	~~$0.45~~	~~$3.41~~	~~$931.18~~

~~(Ord. 9-17. Passed 2-27-17.)~~

Meter Size (Inches)	Monthly Gallons Minimum	Monthly Gallons Surcharge	Over Minimum	Monthly Minimum Charge
3/4	3,000 @ $4.57	$0.60	$4.14	$15.51
1	6,000 @ $4.57	$0.60	$4.14	$31.02
1-1/2	10,000 @ $4.57	$0.60	$4.14	$51.70
2	20,000 @ $4.57	$0.60	$4.14	$103.40
3	45,000 @ $4.57	$0.60	$4.14	$232.65
4	80,000 @ $4.57	$0.60	$4.14	$413.60

EXHIBIT "A"
PAGE 6

Attachment: Exhibit A [Revision 1] (1631 : Ordinance to update water and sewer rates and utility expansion fees)

6	180,000 @ $4.57	$0.60	$4.14	$930.60
8	240,000 @ $4.57	$0.60	$4.14	$1,240.80

Attachment: Exhibit A [Revision 1] (1631 : Ordinance to update water and sewer rates and utility expansion fees)

EXHIBIT "A"
PAGE 7

APPENDIX D
WATER RATES

Effective [~~January 1, 2019 – Residential~~] JANUARY 1, 2023

~~Meter Size (inches)~~	~~Monthly Gallons Minimum~~	~~Monthly Gallons Surcharge~~	~~Over Minimum~~	~~Monthly Minimum Charge~~
~~3/4~~	~~3,000 @ $4.03~~	~~$0.45~~	~~$3.64~~	~~$13.44~~
~~1~~	~~6,000 @ $4.03~~	~~$0.45~~	~~$3.64~~	~~$26.88~~
~~1-1/2~~	~~10,000 @ $4.03~~	~~$0.45~~	~~$3.64~~	~~$44.80~~
~~2~~	~~20,000 @ $4.03~~	~~$0.45~~	~~$3.64~~	~~$89.60~~
~~3~~	~~45,000 @ $4.03~~	~~$0.45~~	~~$3.64~~	~~$201.60~~
~~4~~	~~80,000 @ $4.03~~	~~$0.45~~	~~$3.64~~	~~$358.39~~
~~6~~	~~180,000 @ $4.03~~	~~$0.45~~	~~$3.64~~	~~$806.39~~
~~8~~	~~240,000 @ $4.03~~	~~$0.45~~	~~$3.64~~	~~$1,075.18~~

~~Effective January 1, 2019 – Multi-Family~~

~~Meter Size (inches)~~	~~Monthly Service Charge~~	~~Monthly Gallons Surcharge~~	~~1,000 Gallons Used~~	~~Minimum Charge~~
~~3/4~~	~~$6.18~~	~~$0.45~~	~~$3.64~~	~~$18.47~~
~~1~~	~~$6.18~~	~~$0.45~~	~~$3.64~~	~~$30.75~~
~~1-1/2~~	~~$6.18~~	~~$0.45~~	~~$3.64~~	~~$47.13~~
~~2~~	~~$6.18~~	~~$0.45~~	~~$3.64~~	~~$88.07~~
~~3~~	~~$6.18~~	~~$0.45~~	~~$3.64~~	~~$190.42~~
~~4~~	~~$6.18~~	~~$0.45~~	~~$3.64~~	~~$333.72~~
~~6~~	~~$6.18~~	~~$0.45~~	~~$3.64~~	~~$743.15~~
~~8~~	~~$6.18~~	~~$0.45~~	~~$3.64~~	~~$988.80~~

~~(Ord. 9-17. Passed 2-27-17.)~~

Meter Size (Inches)	Monthly Gallons Minimum	Monthly Gallons Surcharge	Over Minimum	Monthly Minimum Charge
3/4	3,000 @ $4.73	$0.70	$4.28	$16.29
1	6,000 @ $4.73	$0.70	$4.28	$32.58
1-1/2	10,000 @ $4.73	$0.70	$4.28	$54.30
2	20,000 @ $4.73	$0.70	$4.28	$108.60
3	45,000 @ $4.73	$0.70	$4.28	$244.35

EXHIBIT "A"
PAGE 8

Attachment: Exhibit A [Revision 1] (1631 : Ordinance to update water and sewer rates and utility expansion fees)

4	80,000 @ $4.73	$0.70	$4.28	$434.40
6	180,000 @ $4.73	$0.70	$4.28	$977.40
8	240,000 @ $4.73	$0.70	$4.28	$1,303.20

Attachment: Exhibit A [Revision 1] (1631 : Ordinance to update water and sewer rates and utility expansion fees)

EXHIBIT "A"
PAGE 9

APPENDIX E
WATER RATES

Effective [~~January 1, 2020 – Residential~~] JANUARY 1, 2024

~~Meter Size (inches)~~	~~Monthly Gallons Minimum~~	~~Monthly Gallons Surcharge~~	~~Over Minimum~~	~~Monthly Minimum Charge~~
~~3/4~~	~~3,000 @ $4.27~~	~~$0.45~~	~~$3.86~~	~~$14.17~~
~~1~~	~~6,000 @ $4.27~~	~~$0.45~~	~~$3.86~~	~~$28.33~~
~~1-1/2~~	~~10,000 @ $4.27~~	~~$0.45~~	~~$3.86~~	~~$47.22~~
~~2~~	~~20,000 @ $4.27~~	~~$0.45~~	~~$3.86~~	~~$94.43~~
~~3~~	~~45,000 @ $4.27~~	~~$0.45~~	~~$3.86~~	~~$212.48~~
~~4~~	~~80,000 @ $4.27~~	~~$0.45~~	~~$3.86~~	~~$377.74~~
~~6~~	~~180,000 @ $4.27~~	~~$0.45~~	~~$3.86~~	~~$849.91~~
~~8~~	~~240,000 @ $4.27~~	~~$0.45~~	~~$3.86~~	~~$1,133.21~~

~~Effective January 1, 2020 - Multi-Family~~

~~Meter Size (inches)~~	~~Monthly Service Charge~~	~~Monthly Gallons Surcharge~~	~~1,000 Gallons Used~~	~~Minimum Charge~~
~~3/4~~	~~$6.56~~	~~$0.45~~	~~$3.86~~	~~$19.49~~
~~1~~	~~$6.56~~	~~$0.45~~	~~$3.86~~	~~$32.43~~
~~1-1/2~~	~~$6.56~~	~~$0.45~~	~~$3.86~~	~~$49.68~~
~~2~~	~~$6.56~~	~~$0.45~~	~~$3.86~~	~~$92.81~~
~~3~~	~~$6.56~~	~~$0.45~~	~~$3.86~~	~~$200.64~~
~~4~~	~~$6.56~~	~~$0.45~~	~~$3.86~~	~~$351.59~~
~~6~~	~~$6.56~~	~~$0.45~~	~~$3.86~~	~~$782.87~~
~~8~~	~~$6.56~~	~~$0.45~~	~~$3.86~~	~~$1,041.65~~

~~(Ord. 9-17. Passed 2-27-17.)~~

Meter Size (Inches)	Monthly Gallons Minimum	Monthly Gallons Surcharge	Over Minimum	Monthly Minimum Charge
3/4	3,000 @ $4.90	$0.70	$4.43	$16.80
1	6,000 @ $4.90	$0.70	$4.43	$33.60
1-1/2	10,000 @ $4.90	$0.70	$4.43	$56.00
2	20,000 @ $4.90	$0.70	$4.43	$112.00
3	45,000 @ $4.90	$0.70	$4.43	$252.00

EXHIBIT "A"
PAGE 10

Attachment: Exhibit A [Revision 1] (1631 : Ordinance to update water and sewer rates and utility expansion fees)

4	80,000 @ $4.90	$0.70	$4.43	$448.00
6	180,000 @ $4.90	$0.70	$4.43	$1,008.00
8	240,000 @ $4.90	$0.70	$4.43	$1,344.00

Attachment: Exhibit A [Revision 1] (1631 : Ordinance to update water and sewer rates and utility expansion fees)

EXHIBIT "A"
PAGE 11

APPENDIX F
WATER RATES
Gallons @ Rate Per 1,000
(Effective **[~~January 1, 2016~~] JANUARY 1, 2025**)
[~~Residential/Commercial Rates~~]

~~Meter Size (inches)~~	~~Monthly Gallons Minimum~~	~~Monthly Gallons Surcharge~~	~~Over Minimum~~	~~Monthly Minimum Charge~~
~~3/4~~	~~3,000 @ $3.03~~	~~1,000 @ $0.20~~	~~$2.74~~	~~$9.69~~
~~1~~	~~6,000 @ $3.03~~	~~1,000 @ $0.20~~	~~$2.74~~	~~$19.38~~
~~1-1/2~~	~~10,000 @ $3.03~~	~~1,000 @ $0.20~~	~~$2.74~~	~~$32.30~~
~~2~~	~~20,000 @ $3.03~~	~~1,000 @ $0.20~~	~~$2.74~~	~~$64.60~~
~~3~~	~~45,000 @ $3.03~~	~~1,000 @ $0.20~~	~~$2.74~~	~~$145.35~~
~~4~~	~~80,000 @ $3.03~~	~~1,000 @ $0.20~~	~~$2.74~~	~~$258.40~~
~~6~~	~~180,000 @ $3.03~~	~~1,000 @ $0.20~~	~~$2.74~~	~~$581.40~~
~~8~~	~~240,000 @ $3.03~~	~~1,000 @ $0.20~~	~~$2.74~~	~~$775.20~~

~~Multi-Family Rates~~

~~Meter Size (inches)~~	~~Monthly Service Charge~~	~~Monthly Gallons Surcharge~~	~~1,000 Gallons Used~~	~~Minimum Charge~~
~~3/4~~	~~$4.65~~	~~1,000 @ $0.20~~	~~$2.74~~	~~$9.69~~
~~1~~	~~$4.65~~	~~1,000 @ $0.20~~	~~$2.74~~	~~$19.38~~
~~1-1/2~~	~~$4.65~~	~~1,000 @ $0.20~~	~~$2.74~~	~~$32.30~~
~~2~~	~~$4.65~~	~~1,000 @ $0.20~~	~~$2.74~~	~~$64.60~~
~~3~~	~~$4.65~~	~~1,000 @ $0.20~~	~~$2.74~~	~~$145.35~~
~~4~~	~~$4.65~~	~~1,000 @ $0.20~~	~~$2.74~~	~~$258.40~~
~~6~~	~~$4.65~~	~~1,000 @ $0.20~~	~~$2.74~~	~~$581.40~~
~~8~~	~~$4.65~~	~~1,000 @ $0.20~~	~~$2.74~~	~~$775.20~~

~~(Ord. 125-11. Passed 12-12-11.)~~

Meter Size (Inches)	**Monthly Gallons Minimum**	**Monthly Gallons Surcharge**	**Over Minimum**	**Monthly Minimum Charge**
3/4	**3,000 @ $5.07**	**$0.75**	**$4.59**	**$17.46**
1	**6,000 @ $5.07**	**$0.75**	**$4.59**	**$34.92**
1-1/2	**10,000 @ $5.07**	**$0.75**	**$4.59**	**$58.20**
2	**20,000 @ $5.07**	**$0.75**	**$4.59**	**$116.40**

EXHIBIT "A"
PAGE 12

Attachment: Exhibit A [Revision 1] (1631 : Ordinance to update water and sewer rates and utility expansion fees)

3	45,000 @ $5.07	$0.75	$4.59	$261.90
4	80,000 @ $5.07	$0.75	$4.59	$465.60
6	180,000 @ $5.07	$0.75	$4.59	$1,047.60
8	240,000 @ $5.07	$0.75	$4.59	$1,396.80

Attachment: Exhibit A [Revision 1] (1631 : Ordinance to update water and sewer rates and utility expansion fees)

EXHIBIT "A"
PAGE 13

925.05 CONNECTION TO PUBLIC SEWERS.

[No changes until paragraph (e).]

(e) Building Permit Required and Sewer Expansion Fee.

(1) No sewer service shall be constructed to connect with a public sewer nor shall any connection be made to a public sewer within the City until the building permit from the Building Inspection Division has been obtained by the person, firm or corporation employed to perform the work. An application for a permit shall be signed by the owner, agent or lessee of the property for which the connection is to be made and by the person, firm or corporation employed to perform the work, and shall describe the property and state the number of fixtures to be connected.

(2) No building permit shall be issued until a sewer expansion fee is paid. The sewer expansion fee is to be charged according to the following schedule:

			~~Sewer Expansion Fee~~	
~~Water Meter Size~~	~~Equivalent Residential Unit (ERU)~~	~~Treatment Plant~~	~~Collection System~~	~~Total Sewer Exp. Fee~~
~~5/8"~~	~~1.0~~	~~$450~~	~~$1,240~~	~~$1,690~~
~~1"~~	~~1.4~~	~~630~~	~~1,736~~	~~2,366~~
~~1-1/2"~~	~~1.8~~	~~810~~	~~2,232~~	~~3,042~~
~~2"~~	~~2.9~~	~~1,305~~	~~3,596~~	~~4,901~~
~~3"~~	~~11.0~~	~~4,950~~	~~13,640~~	~~18,590~~
~~4"~~	~~14.0~~	~~6,300~~	~~17,360~~	~~23,660~~
~~5"~~	~~21.0~~	~~9,450~~	~~26,040~~	~~35,490~~
~~6"~~	~~29.0~~	~~13,050~~	~~35,960~~	~~49,010~~

Water Meter Size	Equivalent Residential Unit (ERU)	Treatment Plant	Collection System	Total Sewer Expansion Fee
5/8" and 3/4"	1.0	$1,500	$700	$2,200
1"	1.4	$2,100	$980	$3,080
1.5"	1.8	$2,700	$1,260	$3,960
2"	2.9	$4,350	$2,030	$6,380
3"	11.0	$16,500	$7,700	$24,200
4"	14.0	$21,000	$9,800	$30,800
5"	21.0	$31,500	$14,700	$46,200
6"	29.0	$43,500	$20,300	$63,800

[No further changes to this section.]

EXHIBIT "A"

PAGE 14

Attachment: Exhibit A [Revision 1] (1631 : Ordinance to update water and sewer rates and utility expansion fees)

925.08 USER CHARGE ESTABLISHED.

[No changes until paragraph (b)(1).]

(b) User Charge Rate Structure.

(1) The sewer rates for all users of sewer service provided by the City within the corporate limits of the City shall be as shown in the Attached Tables A through **[~~D~~] E**, inclusive, which are incorporated herein by reference and which shall be effective upon the dates stated therein. The existing sewer rates **AS SHOWN IN EXISTING TABLE D EFFECTIVE JANUARY 1, 2020** shall remain in effect until **[~~April 1, 2017~~] JANUARY 1, 2021**. **[~~(Ord. 9-17. Passed 2-27-17.)~~]**

[No further changes to this section.]

Attachment: Exhibit A [Revision 1] (1631 : Ordinance to update water and sewer rates and utility expansion fees)

EXHIBIT "A"
PAGE 15

TABLE A
SEWER RATES

Effective [~~April 1, 2017~~] JANUARY 1, 2021

~~Meter Size (inches)~~	~~Monthly Gallons Minimum~~	~~Monthly Gallons Surcharge~~	~~Over Minimum~~	~~Monthly Minimum Charge~~
~~3/4~~	~~3,000 @ $4.75~~	~~$0.35~~	~~$4.75~~	~~$15.31~~
~~1~~	~~6,000 @ $4.75~~	~~$0.35~~	~~$4.75~~	~~$30.62~~
~~1-1/2~~	~~10,000 @ $4.75~~	~~$0.35~~	~~$4.75~~	~~$51.03~~
~~2~~	~~20,000 @ $4.75~~	~~$0.35~~	~~$4.75~~	~~$102.06~~
~~3~~	~~45,000 @ $4.75~~	~~$0.35~~	~~$4.75~~	~~$229.63~~
~~4~~	~~80,000 @ $4.75~~	~~$0.35~~	~~$4.75~~	~~$408.22~~
~~6~~	~~180,000 @ $4.75~~	~~$0.35~~	~~$4.75~~	~~$918.50~~
~~8~~	~~240,000 @ $4.75~~	~~$0.35~~	~~$4.75~~	~~$1,224.67~~

~~(Ord. 9-17. Passed 2-27-17.)~~

Meter Size (Inches)	Monthly Gallons Minimum	Monthly Gallons Surcharge	Over Minimum	Monthly Minimum Charge
3/4	3,000 @ $5.58	$0.50	$5.58	$18.24
1	6,000 @ $5.58	$0.50	$5.58	$36.48
1-1/2	10,000 @ $5.58	$0.50	$5.58	$60.80
2	20,000 @ $5.58	$0.50	$5.58	$121.60
3	45,000 @ $5.58	$0.50	$5.58	$273.60
4	80,000 @ $5.58	$0.50	$5.58	$486.40
6	180,000 @ $5.58	$0.50	$5.58	$1,094.40
8	240,000 @ $5.58	$0.50	$5.58	$1,459.20

Attachment: Exhibit A [Revision 1] (1631 : Ordinance to update water and sewer rates and utility expansion fees)

EXHIBIT "A"
PAGE 16

TABLE B
SEWER RATES

Effective **[~~January 1, 2018~~] JANUARY 1, 2022**

~~Meter Size (inches)~~	~~Monthly Gallons Minimum~~	~~Monthly Gallons Surcharge~~	~~Over Minimum~~	~~Monthly Minimum Charge~~
~~3/4~~	~~3,000 @ $4.99~~	~~$0.45~~	~~$4.99~~	~~$16.32~~
~~1~~	~~6,000 @ $4.99~~	~~$0.45~~	~~$4.99~~	~~$32.64~~
~~1-1/2~~	~~10,000 @ $4.99~~	~~$0.45~~	~~$4.99~~	~~$54.40~~
~~2~~	~~20,000 @ $4.99~~	~~$0.45~~	~~$4.99~~	~~$108.81~~
~~3~~	~~45,000 @ $4.99~~	~~$0.45~~	~~$4.99~~	~~$244.82~~
~~4~~	~~80,000 @ $4.99~~	~~$0.45~~	~~$4.99~~	~~$435.24~~
~~6~~	~~180,000 @ $4.99~~	~~$0.45~~	~~$4.99~~	~~$979.28~~
~~8~~	~~240,000 @ $4.99~~	~~$0.45~~	~~$4.99~~	~~$1,305.71~~

~~(Ord. 9-17. Passed 2-27-17.)~~

Meter Size (Inches)	**Monthly Gallons Minimum**	**Monthly Gallons Surcharge**	**Over Minimum**	**Monthly Minimum Charge**
3/4	**3,000 @ $5.66**	**$0.50**	**$5.66**	**$18.48**
1	**6,000 @ $5.66**	**$0.50**	**$5.66**	**$36.96**
1-1/2	**10,000 @ $5.66**	**$0.50**	**$5.66**	**$61.60**
2	**20,000 @ $5.66**	**$0.50**	**$5.66**	**$123.20**
3	**45,000 @ $5.66**	**$0.50**	**$5.66**	**$277.20**
4	**80,000 @ $5.66**	**$0.50**	**$5.66**	**$492.80**
6	**180,000 @ $5.66**	**$0.50**	**$5.66**	**$1,108.80**
8	**240,000 @ $5.66**	**$0.50**	**$5.66**	**$1,478.40**

EXHIBIT "A"
PAGE 17

Attachment: Exhibit A [Revision 1] (1631 : Ordinance to update water and sewer rates and utility expansion fees)

TABLE C
SEWER RATES

Effective [~~January 1, 2019~~] JANUARY 1, 2023

~~Meter Size (inches)~~	~~Monthly Gallons Minimum~~	~~Monthly Gallons Surcharge~~	~~Over Minimum~~	~~Monthly Minimum Charge~~
~~3/4~~	~~3,000 @ $5.24~~	~~$0.45~~	~~$5.24~~	~~$17.07~~
~~1~~	~~6,000 @ $5.24~~	~~$0.45~~	~~$5.24~~	~~$34.14~~
~~1-1/2~~	~~10,000 @ $5.24~~	~~$0.45~~	~~$5.24~~	~~$56.90~~
~~2~~	~~20,000 @ $5.24~~	~~$0.45~~	~~$5.24~~	~~$113.80~~
~~3~~	~~45,000 @ $5.24~~	~~$0.45~~	~~$5.24~~	~~$256.05~~
~~4~~	~~80,000 @ $5.24~~	~~$0.45~~	~~$5.24~~	~~$455.20~~
~~6~~	~~180,000 @ $5.24~~	~~$0.45~~	~~$5.24~~	~~$1,024.19~~
~~8~~	~~240,000 @ $5.24~~	~~$0.45~~	~~$5.24~~	~~$1,365.59~~

~~(Ord. 9-17. Passed 2-27-17.)~~

Meter Size (Inches)	Monthly Gallons Minimum	Monthly Gallons Surcharge	Over Minimum	Monthly Minimum Charge
3/4	3,000 @ $5.74	$0.50	$5.74	$18.72
1	6,000 @ $5.74	$0.50	$5.74	$37.44
1-1/2	10,000 @ $5.74	$0.50	$5.74	$62.40
2	20,000 @ $5.74	$0.50	$5.74	$124.80
3	45,000 @ $5.74	$0.50	$5.74	$280.80
4	80,000 @ $5.74	$0.50	$5.74	$499.20
6	180,000 @ $5.74	$0.50	$5.74	$1,123.20
8	240,000 @ $5.74	$0.50	$5.74	$1,497.60

Attachment: Exhibit A [Revision 1] (1631 : Ordinance to update water and sewer rates and utility expansion fees)

EXHIBIT "A"
PAGE 18

TABLE D
SEWER RATES

Effective **[~~January 1, 2020~~] JANUARY 1, 2024**

~~Meter Size (inches)~~	~~Monthly Gallons Minimum~~	~~Monthly Gallons Surcharge~~	~~Over Minimum~~	~~Monthly Minimum Charge~~
~~3/4~~	~~3,000 @ $5.50~~	~~$0.45~~	~~$5.50~~	~~$17.86~~
~~1~~	~~6,000 @ $5.50~~	~~$0.45~~	~~$5.50~~	~~$35.71~~
~~1-1/2~~	~~10,000 @ $5.50~~	~~$0.45~~	~~$5.50~~	~~$59.52~~
~~2~~	~~20,000 @ $5.50~~	~~$0.45~~	~~$5.50~~	~~$119.04~~
~~3~~	~~45,000 @ $5.50~~	~~$0.45~~	~~$5.50~~	~~$267.84~~
~~4~~	~~80,000 @ $5.50~~	~~$0.45~~	~~$5.50~~	~~$476.16~~
~~6~~	~~180,000 @ $5.50~~	~~$0.45~~	~~$5.50~~	~~$1,071.35~~
~~8~~	~~240,000 @ $5.50~~	~~$0.45~~	~~$5.50~~	~~$1,428.47~~

~~(Ord. 9-17. Passed 2-27-17.)~~

Meter Size (Inches)	**Monthly Gallons Minimum**	**Monthly Gallons Surcharge**	**Over Minimum**	**Monthly Minimum Charge**
3/4	**3,000 @ $5.83**	**$0.60**	**$5.83**	**$19.29**
1	**6,000 @ $5.83**	**$0.60**	**$5.83**	**$38.58**
1-1/2	**10,000 @ $5.83**	**$0.60**	**$5.83**	**$64.30**
2	**20,000 @ $5.83**	**$0.60**	**$5.83**	**$128.60**
3	**45,000 @ $5.83**	**$0.60**	**$5.83**	**$289.35**
4	**80,000 @ $5.83**	**$0.60**	**$5.83**	**$514.40**
6	**180,000 @ $5.83**	**$0.60**	**$5.83**	**$1,157.40**
8	**240,000 @ $5.83**	**$0.60**	**$5.83**	**$1,543.20**

Attachment: Exhibit A [Revision 1] (1631 : Ordinance to update water and sewer rates and utility expansion fees)

EXHIBIT "A"
PAGE 19

TABLE E
SEWER RATES
SANITARY SEWER RATES
Gallons @ Rate Per 1,000
(Effective **[~~January 1, 2016~~] JANUARY 1, 2025**)

~~Meter Size (inches)~~	~~Monthly Gallons Minimum~~	~~Monthly Gallons Surcharge~~	~~Over Minimum~~	~~Monthly Minimum Charge~~
~~3/4~~	~~3,000 @ $4.57~~	~~1,000 @ $0.20~~	~~$4.57~~	~~$14.31~~
~~1~~	~~6,000 @ $4.57~~	~~1,000 @ $0.20~~	~~$4.57~~	~~$28.62~~
~~1-1/2~~	~~10,000 @ $4.57~~	~~1,000 @ $0.20~~	~~$4.57~~	~~$47.70~~
~~2~~	~~20,000 @ $4.57~~	~~1,000 @ $0.20~~	~~$4.57~~	~~$95.40~~
~~3~~	~~45,000 @ $4.57~~	~~1,000 @ $0.20~~	~~$4.57~~	~~$214.65~~
~~4~~	~~80,000 @ $4.57~~	~~1,000 @ $0.20~~	~~$4.57~~	~~$318.60~~
~~6~~	~~180,000 @ $4.57~~	~~1,000 @ $0.20~~	~~$4.57~~	~~$858.60~~
~~8~~	~~240,000 @ $4.57~~	~~1,000 @ $0.20~~	~~$4.57~~	~~$1,144.80~~

~~(Ord. 125-11. Passed 12-12-11.)~~

Meter Size (Inches)	**Monthly Gallons Minimum**	**Monthly Gallons Surcharge**	**Over Minimum**	**Monthly Minimum Charge**
3/4	3,000 @ $6.00	$0.60	$6.00	$19.80
1	6,000 @ $6.00	$0.60	$6.00	$39.60
1-1/2	10,000 @ $6.00	$0.60	$6.00	$66.00
2	20,000 @ $6.00	$0.60	$6.00	$132.00
3	45,000 @ $6.00	$0.60	$6.00	$297.00
4	80,000 @ $6.00	$0.60	$6.00	$528.00
6	180,000 @ $6.00	$0.60	$6.00	$1,188.00
8	240,000 @ $6.00	$0.60	$6.00	$1,584.00

EXHIBIT "A"
PAGE 20

Attachment: Exhibit A [Revision 1] (1631 : Ordinance to update water and sewer rates and utility expansion fees)

City Council Ordinance
Regular Meeting - September 28, 2020

Submitted by: Scott Timmer, Director of Finance
Submitting Department: Finance

Subject:
Sidewalk Special Assessment Bond

Legislation Title:
Ordinance providing for the issuance of $85,704.63 of bonds by the City of Fairfield, Ohio, to pay part of the cost of sidewalk repair in the City, and declaring an emergency.

Recommendation:
It is necessary for Council to authorize the issuance of Sidewalk Special Assessment bonds for 2019 in the amount of $85,704.63.

It is recommended that City Council authorize and direct preparation of legislation to authorize the issuance of bonds for the repair of sidewalks against lots that benefited from the improvements. The legislation will require the emergency clause as unpaid assessments were certified to the County Auditor.

Background/Synopsis:
The annual Sidewalk Program required property owners repair sidewalks/aprons that were marked for replacement. Council passed a resolution to authorize the repairs. Invoices were then sent out to the property owners. The outstanding balances were certified to the County Auditor to be collected with the real estate taxes.

In accordance with State law, the City Council must pass an ordinance to issue bonds for outstanding assessments. The bonds to be issued will be purchased by the City treasury and will carry an interest rate of 1.30%.

Financial Impact:
The sidewalk bonds will be purchased by the City treasury, which is permissible under State law. Debt service payments will be repaid from special assessments placed on the properties for sidewalk and apron repaired by the City and collected with the real estate taxes.

Emergency Provision Explanation:
Unpaid sidewalk assessments were certified to the County Auditor and are in the process of being collected with the real estate tax.

Rule Suspension Requested:
Yes

Emergency Provision Needed:
Yes

Attachments:
1. City of Fairfield Fairfield Sidewalk $85,704.63 Legislation (2020 Sidewalk Program)_(16857090)_(1)

CERTIFICATE OF MEMBERSHIP

The undersigned, Finance Director of the City of Fairfield, Butler County, Ohio, hereby certifies that the following were the officers and members of council during the period when proceedings were taken authorizing the issuance of $85,704.63 Sidewalk Special Assessment Bonds (2020 Sidewalk Program), dated as of October 1, 2020:

Mayor	Steve Miller
Finance Director	Scott Timmer
City Manager	Mark Wendling
Clerk of Council	Alisha Wilson
Member of Council	Leslie Besl
Member of Council	Mark Scharringhausen
Member of Council	Dale Paullus
Member of Council	Tim Abbott
Member of Council	Chad Oberson
Member of Council	Terry Senger
Member of Council	Bill Woeste
Law Director	John H. Clemmons

_____
Finance Director

TRANSCRIPT CERTIFICATE

The undersigned, clerk of council of said municipality, hereby certifies that the following is a true and complete transcript of all proceedings relating to the authorization and issuance of the above-identified obligation.

_____
Clerk of Council

Attachment: City of Fairfield Fairfield Sidewalk $85,704.63 Legislation (2020 Sidewalk Program)_(16857090)_(1) [Revision 1] (1632 : Sidewalk

Attachment: City of Fairfield Fairfield Sidewalk $85,704.63 Legislation (2020 Sidewalk Program)_(16857090)_(1) [Revision 1] (1632 : Sidewalk

CERTIFICATE AS TO MAXIMUM MATURITY OF BONDS

The undersigned, being the fiscal officer of the City of Fairfield, County of Butler, Ohio, within the meaning of Section 133.01 of the Uniform Public Securities Law of the Ohio Revised Code, hereby certifies that the estimated life or period of usefulness of the improvement financed with the proceeds of the sale of $85,704.63 of bonds, for the purpose of providing funds to pay the property owner's share of the cost of sidewalk repair in the City is at least five (5) years and that the maximum maturity of said bonds, in accordance with Section 133.20 of the Uniform Public Securities Law of the Ohio Revised Code, is five (5) years pursuant to the special assessment proceedings.

IN WITNESS THEREOF, I have hereunto set my hand this 28th day of September, 2020.

_____

Finance Director

ORDINANCE NO. _____

PROVIDING FOR THE ISSUANCE OF $85,704.63 OF BONDS BY THE CITY OF FAIRFIELD, OHIO, TO PAY PART OF THE COST OF SIDEWALK REPAIR IN THE CITY, AND DECLARING AN EMERGENCY.

WHEREAS, in order to provide for the safety and welfare of the citizens of the City, the City has made certain sidewalk improvements; and

WHEREAS, the fiscal officer of the City has estimated the life of the improvements hereinafter described as at least five (5) years and certified the maximum maturity of bonds as five (5) years pursuant to the special assessment proceedings;

NOW, THEREFORE, BE IT ORDAINED by the Council of the City of Fairfield (herein the "City"), County of Butler, Ohio:

SECTION 1. That it is necessary to issue a bond of the City, in the principal sum of $85,704.63, for the purpose of providing funds to pay the property owner's share of the cost of sidewalk repair in the City under the authority of the provisions of the Ohio Revised Code and the Uniform Public Securities Law thereof.

SECTION 2. That said bond shall be in fully registered form, numbered R-1, shall be dated as of its date of issuance, and bear interest on the outstanding principal amount at the rates per annum set forth on Exhibit A attached hereto and incorporated herein, which the Finance Director has certified to be not in excess of a fair market rate of interest, payable annually on December 1 each year, commencing December 1, 2021, until the principal sum is paid. Said bond shall mature in installments as set forth on Exhibit A on December 1 of each year from 2021 through 2025, inclusive. The principal and interest on said bond shall be payable by check or draft to the registered holder thereof. Said bond shall be designated "Sidewalk Special Assessment Bonds (2020 Sidewalk Program)."

SECTION 3. That said bond shall be executed by the City Manager and Finance Director and shall bear the corporate seal of the City. Said bond shall be payable at the office of the Finance Director, City of Fairfield, Ohio, and shall express upon its face the purpose for which it is issued and that it is issued in pursuance of this ordinance.

SECTION 4. That said bond shall be sold by the Finance Director at par and accrued interest to the Special Assessment Fund of the City, and the proceeds from such sale, except any premium or accrued interest thereon, shall be paid into the proper fund and used for the purpose aforesaid and for no other purpose. Premium and accrued interest, if any, shall be transferred to the Bond Retirement Fund to be applied to the payment of the principal of and interest on said bond in the manner provided by law.

SECTION 5. That said bond shall be the full general obligation of this City, and the full faith, credit and revenue of this City are hereby pledged for the prompt payment of the same. Any excess funds resulting from the issuance of said bond, shall, to the extent necessary, be used

only for the retirement of said bond at maturity, together with interest thereon and is hereby pledged for such purpose.

SECTION 6. That during the period while the bond runs there shall be levied upon all of the taxable property in the City, within applicable limitations, in addition to all other taxes, a direct tax annually; said tax shall be and is hereby ordered computed, certified, levied and extended upon the tax duplicate and collected by the same officers in the same manner and at the same time that taxes for general purposes for each of said years are certified, extended and collected. Said tax shall be placed before and in preference to all other items and for the full amount thereof.

The funds derived from said tax levy hereby required shall be placed in a separate and distinct fund and, together with interest collected on the same, shall be irrevocably pledged for the payment of the principal and interest of the bond, when and as the same fall due; provided, however, to the extent other City monies, including monies from the levy and collection of special assessments, are available and appropriated for such purpose said tax shall not be levied therefor.

SECTION 7. This council hereby finds and determines that all formal actions relative to the adoption of this ordinance were taken in an open meeting of this council, and that all deliberations of this council and of its committees, if any, which resulted in formal action, were taken in meetings open to the public, in compliance with the law.

SECTION 8. All appropriate officers of the City are further authorized to make, execute, acknowledge and deliver such closing certificates, financing statements and other instruments or agreements as are, in the opinion of bond counsel, necessary to carry out the purposes of this ordinance.

SECTION 9. That the firm of Dinsmore & Shohl LLP ("Dinsmore"), is hereby engaged as the City's "bond counsel" pursuant to the engagement letter of Dinsmore on file with the City.

SECTION 10. That this ordinance is hereby declared to be an emergency measure for the necessary preservation of the public peace, health, safety and welfare or for the urgent benefit or protection of the inhabitants of the City of Fairfield, and for the reason that the immediate issuance of said bonds is necessary to provide funds for payment for the improvements hereinabove described, and shall take effect immediately upon its passage, pursuant to Section 4.07(A) of the Charter of the City of Fairfield (hereafter called the "Charter").

SECTION 11. That the Clerk of Council is hereby directed to forward a certified copy of this ordinance to the County Auditor of Butler County, Ohio.

Attachment: City of Fairfield Fairfield Sidewalk $85,704.63 Legislation (2020 Sidewalk Program)_(16857090)_(1) [Revision 1] (1632 : Sidewalk

SECTION 12. That the Clerk of Council is hereby directed to cause this ordinance to be published or posted within ten days after its passage, as required by Section 4.13(A) of the Charter, any publication to be made in the Journal News, a newspaper of circulation in the City.

ADOPTED September __, 2020.

Clerk of Council

Mayor

Attachment: City of Fairfield Fairfield Sidewalk $85,704.63 Legislation (2020 Sidewalk Program)_(16857090)_(1) [Revision 1] (1632 : Sidewalk

EXHIBIT A

Date	Principal	Coupon	Interest	Period Total
12/01/21	$16,701.02	1.30%	$1,299.85	$18,000.87
12/01/22	16,918.13	1.30	897.05	17,815.18
12/01/23	17,138.07	1.30	677.11	17,815.18
12/01/24	17,360.86	1.30	454.32	17,815.18
12/01/25	17,586.55	1.30	228.63	17,815.18
Total	$85,704.63		$3,556.96	$89,261.59

Attachment: City of Fairfield Fairfield Sidewalk $85,704.63 Legislation (2020 Sidewalk Program)_(16857090)_(1) [Revision 1] (1632 : Sidewalk

CERTIFICATE

The undersigned, Clerk of Council, Fairfield, Ohio, hereby certifies the foregoing to be a true and correct copy of Ordinance No. _____ adopted September __, 2020.

_____
Clerk of Council

CERTIFICATE

The undersigned, Finance Director, Fairfield, Ohio, hereby certifies that Ordinance No. _____ was filed with the County Auditor of Butler County, Ohio, on _____, 2020.

_____
Finance Director

RECEIPT

The undersigned, County Auditor of the Butler County, Ohio, acknowledges receipt of Ordinance No. _____ of the City of Fairfield, Ohio, on _____, 2020.

_____
County Auditor

Attachment: City of Fairfield Fairfield Sidewalk $85,704.63 Legislation (2020 Sidewalk Program)_(16857090)_(1) [Revision 1] (1632 : Sidewalk

Attachment: City of Fairfield Fairfield Sidewalk $85,704.63 Legislation (2020 Sidewalk Program)_(16857090)_(1) [Revision 1] (1632 : Sidewalk

EXTRACT FROM MINUTES OF MEETING

The Council of the City of Fairfield, Ohio, met in regular session, at ____ _.m., on the ___ day of September, 2020, at 5350 Pleasant Avenue, Fairfield, Ohio, with the following members present:

There was presented and read to Council Ordinance No. _____, entitled:

> **PROVIDING FOR THE ISSUANCE OF $85,704.63 OF BONDS BY THE CITY OF FAIRFIELD, OHIO, TO PAY PART OF THE COST OF SIDEWALK REPAIR IN THE CITY, AND DECLARING AN EMERGENCY.**

M__ _____ moved to suspend the rule requiring each ordinance or resolution to be read on three different days. M__ _____ seconded the motion and, the roll being called upon the question, the vote resulted as follows:

M__ _____ then moved that Ordinance No. _____ be adopted. M__ _____ seconded the motion and, the roll being called upon the question, the vote resulted as follows:

The ordinance was declared adopted _____.

CERTIFICATE

The undersigned, clerk of council of said municipality, hereby certifies that the foregoing is a true and correct extract from the minutes of a meeting of the council of said municipality, held on the ___ day of September, 2020, to the extent pertinent to consideration and adoption of the above-entitled legislation.

_____
Clerk of Council

City Council Ordinance
Regular Meeting - September 28, 2020

Submitted by: Alisha Wilson, Clerk
Submitting Department: Clerk

Subject:
Contractual Appropriations

Legislation Title:
Ordinance to amend Ordinance No. 119-19 entitled "An Ordinance to make estimated appropriations for the expenses and other expenditures of the City of Fairfield, Ohio, during a period beginning January 1, 2020, and ending December 31, 2020."

Recommendation:
It is recommended that City Council suspend the rules requiring a second and third reading of this Ordinance and adopt the appropriations listed above.

Background/Synopsis: Please refer to specific Council Communications for full description of these items.

$25,000 for concrete improvements at Seward Road Water Storage Tower site (existing contract);
$55,000 for Parks and Recreation Software Upgrade (existing contract).

Financial Impact: $80,000.00 from noted funding source.

Rule Suspension Requested:
Yes

Emergency Provision Needed:
No

Attachments:
1. ContractualAppropriations.092820
2. Contractual 9-28-Ord

City Council Ordinance
Regular Meeting - September 28, 2020

Submitted by: Adam Sackenheim,
Submitting Department: Public Utilities

Subject:
Appropriation for concrete improvements

Legislation Title:
Appropriation for concrete improvements at the City's Seward Road Water Storage Tower site

Recommendation:
It is recommended that City Council authorize an appropriation in the amount of $25,000.00 for concrete improvements at the City's Seward Road Water Storage Tower site..

Background/Synopsis:

The request is for appropriations necessary to pay for the installation of a new concrete parking pad at the City's Seward Road Water Storage Tower site. This pad will improve the site and will give City staff and water system contractors access to an elevated, dry and flat area for the storage of equipment and vehicles. Currently there is no paved area on this parcel – only a gravel driveway. Current conditions make site logistics challenging for City staff members and contractors performing extended onsite work – as equipment and vehicles and supplies must be staged in grassy areas. A conceptual schematic of the parking pad is included for Council review.

Concrete work will be performed by Prus Construction under an existing 2018 City contract (extended into 2019 and 2020) and administered by Fairfield's Public Works Department. Public Works' inspectors will oversee contractor performance to verify concrete work is performed in accordance with City standards. Concrete work will be performed at contracted unit-pricing. Based on these unit-pricing rates, total project cost is estimated at $25,000.00.

It is recommended that City Council authorize an appropriation in the amount of $25,000.00 for concrete work at the City's Seward Tank site.

Financial Impact:

2020 funding for this project is included in the approved 2020-2024 Capital Improvement Program (CIP) under project 0WT14 (Asphalt/Concrete Replacement). $25,000.00 is requested from 0WT14. The funding sources are the Water Surplus Fund.

Emergency Provision Explanation:

Attachment: ContractualAppropriations.092820 [Revision 1] (1633 : Contractual Appropriations)

N/A

Rule Suspension Requested:
Yes

Emergency Provision Needed:
No

Attachments:
1. Seward Tank park pad 09152020

Attachment: ContractualAppropriations.092820 [Revision 1] (1633 : Contractual Appropriations)

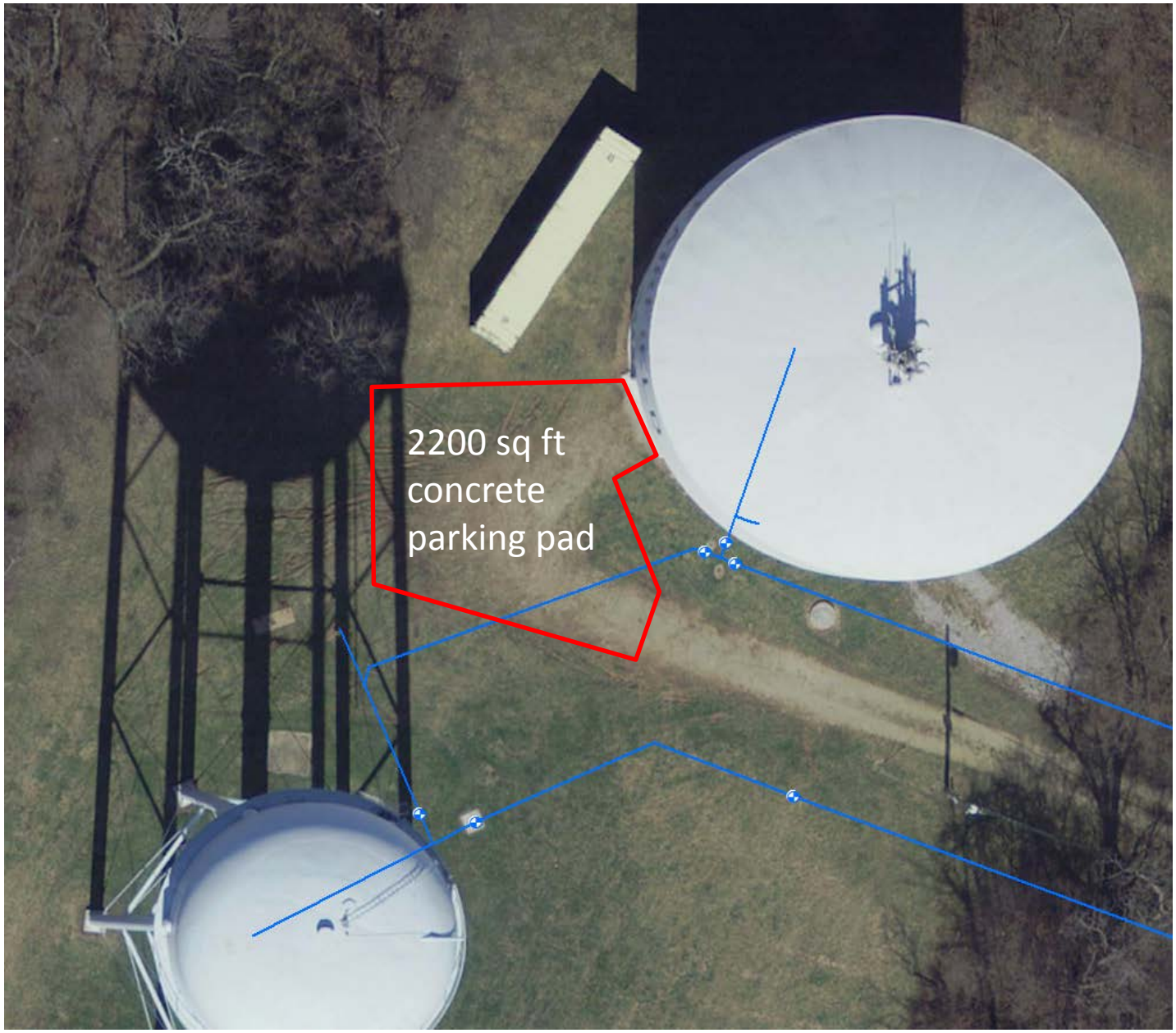

Attachment: ContractualAppropriations.092820 [Revision 1] (1633 : Contractual

City Council Information Item
Regular Meeting - September 28, 2020

Submitted by: Brad Williams,
Submitting Department: Parks

Subject:
Parks and Recreation Software Upgrade

Legislation Title:
Parks and Recreation Software Upgrade

Background/Synopsis:
The Fairfield Parks and Recreation Department identified in its 2018-2022 Capital Improvement Program the purchase and upgrade of Parks and Recreation Software (0PR05). Parks Staff, with assistance from the Assistant City Manager, IT Manager and Finance Director, evaluated multiple vendors and selected RecTrac as the best option. RecTrac Software allows for activity registration, ticket sales, facility rentals, point-of-sale, online registration with payment collection as well as online tee times for the Fairfield Greens Golf Courses.
This $55,000 appropriation is for year three of a three year purchase plan and includes one-third of the VSI Software License, all training, travel expenses, shipping, annual maintenance/service fees and $1,457 for hardware upgrades.

Financial Impact:
An appropriation of $55,000.00 is necessary to fund this proposal.

Emergency Provision Explanation:
It is recommended that City Council authorize an appropriation of funding for the licensing and hardware upgrades can be completed.

Attachments:
1. O.18-18.RecTracSoftware

Attachment: ContractualAppropriations.092820 [Revision 1] (1633 : Contractual Appropriations)

ORDINANCE NO. 18-18

ORDINANCE TO AUTHORIZE THE CITY MANAGER TO ENTER INTO A CONTRACT WITH VERMONT SYSTEMS, INCORPORATED FOR THE PURCHASE OF RECTRAC REGISTRATION/POS SOFTWARE FOR USE BY THE PARKS & RECREATION DEPARTMENT AND DECLARING AN EMERGENCY.

BE IT ORDAINED by the Council of the City of Fairfield, Ohio, that:

Section 1. The City Manager is hereby authorized to enter into a contract with Vermont Systems, Incorporated for the purchase of RecTrac Registration/POS Software for use by the Parks & Recreation Department in accordance with the proposal on file in the office of the City Manager. This contract is authorized as an emergency without advertising and competitive bidding because the old software is no longer being supported and needs to be replaced as soon as possible.

Section 2. This Ordinance is hereby declared to be an emergency measure necessary for the urgent benefit and protection of the City and its inhabitants for the reason that the old software is no longer being supported and needs to be replaced as soon as possible; wherefore, this ordinance shall take effect immediately upon its passage.

Passed 3/12/18

Mayor's Approval

Posted 3/13/18

First Reading 3/12/18 Rules Suspended 3/12/18

Second Reading — Emergency 3/12/18

Third Reading —

ATTEST:

Clerk of Council

This is to certify that this Ordinance has been duly published by posting and summary publication as provided by Charter.

Clerk of Council

Active Clients\City of Fairfield\Ordinances\2018\Vermont Systems, Incorporated-Ord

Attachment: ContractualAppropriations.092820 [Revision 1] (1633 : Contractual Appropriations)

ORDINANCE NO. _____

ORDINANCE TO AMEND ORDINANCE NO. 119-19 ENTITLED "AN ORDINANCE TO MAKE ESTIMATED APPROPRIATIONS FOR THE EXPENSES AND OTHER EXPENDITURES OF THE CITY OF FAIRFIELD, OHIO, DURING A PERIOD BEGINNING JANUARY 1, 2020, AND ENDING DECEMBER 31, 2020."

BE IT ORDAINED by the Council of the City of Fairfield, Ohio, that:

Section 1. Ordinance No. 119-19, the 2020 Appropriation Ordinance, is hereby amended in the following respects:

From:	**Unappropriated Capital Improvement Fund**	**$55,000**
To:	40216025-253400 Computer Supplies *(Parks & Recreation Department Software Upgrades 0PR05)*	$55,000
From:	**Unappropriated Water Surplus Fund**	**$25,000**
To:	60516025-252000 Improvements Other Than Building *(Asphalt / Concrete Replacement 0WT14)*	$25,000

Section 2. This Ordinance shall take effect at the earliest period allowed by law.

Passed _____ _____
Mayor's Approval

Posted _____

First Reading _____ Rules Suspended _____

Second Reading _____

Third Reading _____

ATTEST:

_____
Clerk of Council

Attachment: Contractual 9-28-Ord (1633 : Contractual Appropriations)

This is to certify that this Ordinance has been duly published by posting and summary publication as provided by Charter.

_____

Clerk of Council

Active Clients\City of Fairfield\Ordinances\2020\Contractual 9-28-Ord

City Council Ordinance
Regular Meeting - September 28, 2020

Submitted by: Alisha Wilson, Clerk
Submitting Department: Clerk

Subject:
Non-Contractual Appropriations

Legislation Title:
Ordinance to amend Ordinance No. 119-19 entitled "An Ordinance to make estimated appropriations for the expenses and other expenditures of the City of Fairfield, Ohio, during a period beginning January 1, 2020, and ending December 31, 2020."

Recommendation:
It is recommended that City Council suspend the rules requiring a second and third reading of this Ordinance and adopt the appropriations listed above.

Background/Synopsis: Please refer to specific Council Communications for full description of these items.

$7,000 for asphalt repairs;
$28,360 for engineering services for water main replacement project;
$30,800 for software integration services;
$2,084 for security camera at Wastewater Plant.

Financial Impact: $68,244.00 from noted funding source.

Rule Suspension Requested:
Yes

Emergency Provision Needed:
No

Attachments:
1. NonContractualAppropriations.092820
2. NonContractual 9-28-Ord

City Council Information Item
Regular Meeting - September 28, 2020

Submitted by: Matt Young,
Submitting Department: Public Utilities

Subject:
Appropriation for asphalt repairs

Legislation Title:
Appropriation for asphalt repairs at Winton Tank

Background/Synopsis:

This request is for appropriations necessary to pay for preparing the asphalt subgrade and for permanent asphalt repairs to Burer Lane/Winton Tank Driveway near the Winton Water Tank. The work will include improvement to the shoulders of the driveway and an overlay of the asphalt surface from House number 5348 to the pavement placed in 2019 near the pavement terminus.

Barry L Brown Paving will perform asphalt repairs, per the attached quote. The Public Works Department will inspect the work. It is recommended that City Council authorize an appropriation in the amount of $7,000.00 for the stated asphalt repairs.

Financial Impact:

2020 funding for this project is included in the approved 2020-2024 Capital Improvement Program (CIP) under project 0WT14. The funding source is the Water Surplus Fund.

Attachments:
1. Burer Ln - Winton Tank paving 2020 QUOTE
2. Burer lane schematic

Attachment: NonContractualAppropriations.092820 (1634 : Non-Contractual Appropriations)

Proposal

Barry L Brown Paving
3210 Homeward Way
Fairfield, OH 45014
513-874-1588

Date: 9/13/2020

Proposal Submitted To:
City of Fairfield

Job Name and Location:
Beurer Ln Water Tower

We hereby submit specifications and estimates for:

base bid:	
pad approx 18'x18', widen both sides of drive 11'x2' and 150'x2'	
6" 304 gravel, 2" asphalt base and 2" asphalt surface	$5,000
Alternate:	
resurface existing driveway approx 100'x12' with 1 1/2" asphalt surface course	$1,000
alternate 2	
excavation for above work	$1,000

We Propose hereby to furnish material and labor - complete in accordance with above specifications, for the sum of:

dollars

Chad Brown
Authorized Signature Date

Acceptance of Proposal Date

Note: This proposal may be withdrawn by us if not accepted within 60 days.

Attachment: NonContractualAppropriations.092820 (1634 : Non-Contractual Appropriations)

Burer Lane – pavement improvements near Fairfield's Winton Water Tower

1. The red area – Public Utilities will excavate 9" and compact 6" of #304. Please provide a price to place 3" of asphalt – 2 lifts in the red areas.
2. The blue area – Public Utilities will perform the same work in the red. Please provide a price to pave 1 ¼" over the entire blue area with your paver. The intention on the south side is for the finish course to follow the new red line, then the existing edge of pavement to the driveway of the first home.

Attachment: NonContractualAppropriations.092820 (1634 : Non-Contractual

City Council Information Item
Regular Meeting - September 28, 2020

Submitted by: Adam Sackenheim,
Submitting Department: Public Utilities

Subject:
Appropriation for engineering services for water main replacement project

Legislation Title:
An appropriation in the amount of $28,360.00 is being requested for survey, design and engineering services related to the planned 2022-2023 John Gray Road water main replacement project.

Background/Synopsis:

Engineering services are necessary in preparation for the planned John Gray Road water main replacement project. Technical services will include field surveying, construction plan design, and record drawing preparation.

The City intends to replace approximately 3,200 feet of 1973 era 10" iron pipe with new 12" poly-wrapped ductile iron pipe on John Gray Road between Pleasant Avenue and Kings Arms Way. The project has been identified by staff as a priority project for replacement based on the high number of main breaks and related service interruptions in the area, and the difficulty associated with main break repairs due to traffic patterns.

The project is scheduled to be constructed in 2022 or 2023, depending on capital funding availability.

Technical and engineering services will be performed by Choice One Engineering Corporation; proposal is attached. Cost of engineering services is $28,360.00.

In 2018, Choice One was selected from three engineering firms following a quality-based review to design the City's Ross and Mack water main replacement project and the City's Donald Drive water main replacement project. In light of that positive experience and the relationships developed, the City considers Choice One a cost-effective and technically-sound consultant and desires to use their services on this project.

Financial Impact:

Funding for this project was included in the approved 2020-2024 Capital Improvement Program under project number 0WT10 – Small Water Line Improvements. The funding source is the Water Surplus Fund.

Attachments:

Attachment: NonContractualAppropriations.092820 (1634 : Non-Contractual Appropriations)

1. 2020-03-09_Agreement-JohnGray

Attachment: NonContractualAppropriations.092820 (1634 : Non-Contractual Appropriations)

Choice One Engineering

Date	Attention	Address
March 9, 2020	Adam Sackenheim Public Utilities Director asackenheim@fairfield-city.org	City of Fairfield 5021 Groh Lane Fairfield, OH 45014

Subject
Agreement for Professional Services
John Gray Road Water Main Replacement
BUT-FAI-2002

Dear Mr. Sackenheim:

Choice One Engineering Corporation appreciates the opportunity to provide services for the John Gray Road Water Main Replacement Project.

This Agreement is by and between the City of Fairfield, hereinafter referred to as Client, and Choice One Engineering Corporation, hereinafter referred to as Choice One. If everything is acceptable, please execute two originals, keeping one for your files and returning one to Choice One. Choice One will not start work on this Project until the Agreement is signed and received in our office.

This Agreement is subject to the provisions of the following which are attached to and made a part of this Agreement: Scope of Services, Compensation, and Schedule, consisting of 5 pages and Choice One Engineering Corporation Standard Terms & Conditions consisting of three pages.

Authorization by the Client to proceed, whether oral or written, constitutes acceptance of the terms and conditions of this Agreement, without modification, addition, or deletion. Client and Choice One each bind itself and its partners, successors, executors, administrators of this executed Agreement.

City of Fairfield	**Choice One Engineering Corporation**
_____	_____
Authorized Signature	Jacob L. Bertke, P.E., Project Manager
_____	3/9/2020
Date	Date

West Central Ohio
440 E. Hoewisher Rd.
Sidney, OH 45365
937.497.0200 Phone

S. Ohio/N. Kentucky
203 W. Loveland Ave.
Loveland, OH 45140
513.239.8554 Phone

Eastern Indiana
607 N. Meridian St.
Portland, IN 47371
260.766.2500 Phone

WWW.CHOICEONEENGINEERING.COM

Attachment: NonContractualAppropriations.092820 (1634 : Non-Contractual Appropriations)

Scope of Services

Project Snapshot

Choice One intends to provide construction plans for the installation of new water main on John Gray Road between Kings Arms Way and Pleasant Avenue.

Project Details

- It is assumed that the water main will be designed in the right-of-way.
- A topographic survey will be performed along the project route. See attached exhibit for project area.
- Water main design will follow City of Fairfield standards and specifications.
- The existing 10" main on John Gray Road will be replaced with 12" ductile iron water main.
- Fire hydrants, valves, and water service lines will be replaced along the project route.
- Water main at intersections will be set up for future extensions, as needed.
- Project will be bid at the end of 2020, and built in 2021.
- Material and construction standards will be covered by general notes and standard City of Fairfield details.
- Maintenance of traffic will be covered by general notes and ODOT standard construction drawings.
- A Water Submittal will not need to be submitted to the Ohio EPA for this project.
- Easement legal descriptions and exhibits are not included in this scope, but if some end up being needed, Choice One can perform that work at an additional fee.
- Choice One will meet with City after 50% plans and 90% plans are complete to discuss water main alignments prior to detailed design being finished.
- Based on recent projects with the City and the length of this project, we estimate this project cost to be around $750,000.00.
- Choice One will perform construction administration services upon request at our standard hourly rates (attached).

Project Services

1. **Topographic Survey**
    a. Contact Ohio Utilities Protection Service (OUPS) for underground utility locations.
    b. Perform necessary deed and plat research.
    c. Establish horizontal and vertical survey control for the project area.
    d. Field reconnaissance and traverse of existing monumentation.
    e. Identify visible features from 10' beyond right-of-way for both sides including utilities and drainage.
    f. Provide roadway cross-sections every 50', at driveways, and other critical areas.
    g. Inventory manholes and catch basins including type of construction, depth, pipe size, and condition.
    h. Locate underground utilities as marked by the appropriate utility companies.
    i. The location of existing right-of-way lines is anticipated to be a factor for the project design. Boundary resolution of the properties along the route will be completed to show location of existing right-of-way lines and adjacent property lines based on existing monumentation, plats, deeds, and other readily-available information.
    j. Provide one (1) foot contour intervals.
    k. Completed topographic survey shall be provided in AutoCAD format.

Attachment: NonContractualAppropriations.092820 (1634 : Non-Contractual Appropriations)

2. **Construction Plans**
    a. Prepare construction plans to include the following:
        i. Title Sheet
        ii. General Notes
        iii. Maintenance of Traffic Notes
        iv. Water Main Notes and Details
        v. Quantity Summary
        vi. Plan and Profile (scale 1" = 20' horizontal, 1" = 5' vertical)
    b. Submit construction plans to utility companies for their review.
    c. Prepare an Engineer's Estimate.
    d. Meet with City to go over 50% plans and 90% plans.
    e. Field walk project route.
    f. Provide construction plans in AUTOCAD and PDF format.
    g. Provide final paper sets of plans in color, (11" x 17" and 24" x 36").
    h. No Water Data Submittal to Ohio EPA is needed.
    i. Assistance during public bidding procedures is included in the construction administration phase.
3. **Record Drawings**
    a. Prepare Record Drawings to include:
        i. Meter and curb stop locations
        ii. Water valve locations.
        iii. Fire hydrant locations.
        iv. Recorded changes by the City and/or contractor to water main alignment.
    b. Provide Record Drawings to City in pdf format.
4. **Construction Administration Services**
    a. *Construction Administration services listed below will be provided upon request on an hourly basis according to our current Standard Hourly Rate Schedule.*
        i. Administrate plan interpretation for contractor and Client during bidding and construction, as required.
        ii. Attend bid opening and preconstruction meeting, if requested.
        iii. Attend meetings or visit construction site at the request of the Client with contractor.
        iv. Conduct final inspection and provide a punch list.
        v. Review shop drawings.

Additional Services

We have the skill, experience, and knowledge to provide additional services as listed below. Additional services will be approved by the Client prior to commencement and will be performed on an hourly basis according to our current Standard Hourly Rate Schedule or a mutually negotiated lump sum fee.

1. Sanitary Sewer Design
2. Detailed Maintenance of Traffic Plans
3. Construction Layout Staking

Client Responsibilities

- Payment of all agency-related fees.
- Provide any available existing plans.
- Perform subsurface investigation, if necessary.
- Execute necessary Work Agreements and Easements.
- Provide timely decisions to keep design work on schedule.

Attachment: NonContractualAppropriations.092820 (1634 : Non-Contractual Appropriations)

Compensation & Schedule

Compensation

Lump Sum Fee Schedule	
Topographic Survey	$7,390.00
Construction Plans	$17,470.00
Record Drawings	$2,000.00
Total	**$26,860.00**
Construction Administration Services	Hourly Upon Request. Budget of $1,500.00
Total including Construction Administration Budget	**$28,360.00**

Schedule

Choice One will have the construction plans completed by the end of November 2020, to allow the City to advertise the project for bid prior to the end of the year.

Attachment: NonContractualAppropriations.092820 (1634 : Non-Contractual Appropriations)

BUT-FAI-2002 John Gray Water Main

-3350' for water main replacement
-Survey r/w to r/w
-Pick up meter pits/curb stops, etc. outside of R/W
-Establish R/W
-50' or so into side streets on north side. No need to on south side (GCWW Water)
-Fairfield Corp line runs along John Gray Road

Attachment: NonContractualAppropriations.092820 (1634 : Non-Contractual Appropriations)

2020 Standard Hourly Rate Schedule

PROFESSIONAL SERVICE	HOURLY RATE
Professional Engineer	$140
Professional Surveyor	$120
Landscape Architect	$110
Designer	$95
Field Surveyor	$95
Administrative	$65

All reimbursables such as reproduction, transportation, and project-related expenses will be charged at their cost.

Hourly rates may vary from this Standard Hourly Rate Schedule depending on project complexity, professional liability, or other agreements. Work that is required out of our normal working hours requiring overtime compensation may be subject to higher rates.

This Standard Hourly Rate Schedule is reviewed and adjusted at the beginning of each calendar year.

ChoiceOne Engineering

Effective as of January 1, 2020

Attachment: NonContractualAppropriations.092820 (1634 : Non-Contractual Appropriations)

Choice One Engineering Corporation
Standard Terms & Conditions
4/17/2018

Services Choice One Engineering Corporation (Choice One) will perform services for the Project as set forth in the Choice One agreement and in accordance with these Terms & Conditions. Choice One has developed the Project scope of service, schedule, and compensation based on available information and various assumptions. The Client acknowledges that adjustments to the schedule and compensation may be necessary based on the actual circumstances encountered by Choice One in performing their services.

Additional Services The Client and Choice One acknowledge that additional services may be necessary for the Project to address issues that may not be known at Project initiation or that may be required to address circumstances that were not foreseen. In that event, Choice One will notify the Client of the need for additional services and the Client will pay for such additional services at an hourly rate or as agreed to by the Client and Choice One.

Project Requirements The Client will confirm the objectives, requirements, constraints, and criteria for the Project at its inception. If the Client has established design standards, they will be furnished to Choice One at Project inception. Choice One will review the Client design standards and may recommend alternate standards considering the standard of care provision.

Period of Service Choice One will perform the services for the Project with due and reasonable diligence consistent with normal professional practices according to the Project Schedule. Should Choice One discern that the schedule cannot be met for any reason, Choice One will notify the Client as soon as practically possible.

Limitation of Liability In recognition of the relative risks and benefits of the project to both the Client and Choice One, the Client agrees to the fullest extent permitted by law, to limit the liability of Choice One for any and all damages or claim expenses arising out of this agreement, from any and all causes, to $50,000 or the fee realized by Choice One for the Project, whichever is greater.

Compensation In consideration of the services performed by Choice One, the Client will pay Choice One in the manner set forth in the Choice One agreement. The parties acknowledge that terms of compensation are based on an orderly and continuous progress of the Project. Compensation will be reasonably adjusted for delays or extensions of time beyond the control of Choice One.

Payment Terms Choice One will submit monthly invoices for services performed and Client will pay the full invoice amount within thirty (30) calendar days of the invoice date. Invoices will be considered correct if not questioned in writing within ten (10) calendar days of the invoice date. In the event of a disputed or contested billing, only that portion so contested may be withheld from payment, and the undisputed portion will be paid. No interest will accrue on any contested portion of the billing until mutually resolved. Client will exercise reasonableness in contesting any billing or portion thereof. Choice One will be entitled to a 1.5% per month administrative charge in the event of payment delay. Client payment to Choice One is not contingent on arrangement of project financing. Invoice payment delayed beyond sixty (60) calendar days will give Choice One the right to suspend services until payments are current. Nonpayment beyond seventy (70) calendar days will be just cause for termination by Choice One.

Amendment This Agreement may not be amended except in writing and executed by both Choice One and Client. No alterations or modifications to these Terms and Conditions will be effective unless affirmatively contained in the signed amendment.

Assignment Neither party will assign its rights, interests or obligations under the Project without the express written consent of the other party.

Authorized Representatives The officer assigned to the Project by Choice One is the only authorized representative to make decisions or commitments on behalf of Choice One. The Client will designate a representative with similar authority.

Betterment If, due to Choice One's error or omission, any required item or component of the project is omitted from Choice One's construction documents, Choice One will not be responsible for paying the cost to add such item or component to the extent that such item or component would have been otherwise necessary to the project or otherwise adds value or betterment to the project. In no event will Choice One be responsible for any cost or expense that provides betterment, upgrade, or enhancement of the project.

Buried Utilities Where applicable to the Project, Choice One will conduct research and prepare a plan indicating the locations of underground improvements intended for subsurface penetration with respect to assumed locations of underground improvements. Such services by Choice One will be performed in manner consistent with ordinary standard of care. Client recognizes that the research may not identify all underground improvements and that the information on which Choice One relies may contain errors or may not be complete. The Client agrees to waive all claims and causes of action against Choice One for damages to underground improvements resulting from subsurface penetration locations established by Choice One, except for damages caused by the sole negligence or willful misconduct of Choice One.

Compliance with Laws Choice One will perform its services consistent with normal professional practice and endeavor to incorporate laws, regulations, codes, and standards applicable at the time the work is performed. In the event that standards of practice change during the Project, Choice One will be entitled to additional compensation where additional services are needed to conform to the standard of practice.

Attachment: NonContractualAppropriations.092820 (1634 : Non-Contractual Appropriations)

Consequential Damages Neither the Client nor Choice One will be liable to the other for any consequential damages regardless of the nature or fault.

Construction Observation, If Applicable Construction observation will consist of visual observation of materials, equipment, or construction services for the purpose of ascertaining that the service is in general conformance with the Contract Documents. Such observation will not be construed as relieving the parties under contract in any way from their obligations and responsibilities under the Contract Documents. Specifically, observation will not require Choice One to assume responsibilities for the means and methods of construction. The Client has not retained Choice One to make detailed inspections or to provide exhaustive or continuous project review and observation services. Choice One does not guarantee the performance of, and will have no responsibility for, the acts or omissions of any contractor, subcontractor, supplier, or any other entity furnishing materials or performing any services on the project.

Cost Estimates or Opinions Choice One may prepare cost estimates or opinions for the Project based on historical information that represents the judgment of a qualified professional. The Client and Choice One acknowledge that actual costs may vary from the cost estimates or opinions prepared and that Choice One offers no guarantee related to the Project cost.

Defects in Service The Client will promptly report to Choice One any defects or suspected defects in service. The Client further agrees to impose a similar notification requirement on all contractors in its Client/Contractor agreement and will require all subcontracts at any level to contain a like provision. Failure by the Client and Client's contractors and subcontractors to notify Choice One will relieve Choice One of the costs of remedying the defects above the sum such remedy would have cost had prompt notification been given when such defects were first discovered.

Delays The services of each task will be considered complete when deliverables for the task have been presented to the Client. Choice One will be entitled to an extension of time and compensation adjustment for any delay beyond Choice One's control.

Design Without Construction Administration The Client acknowledges that there could be misinterpretations of Choice One Design Documents during construction, which could lead to errors and subsequent loss or damage. The Client assumes all responsibility for interpretation of the Contract Documents and for construction observation and the Client waives any claims against Choice One that may be in any way connected hereto.

Dispute Resolution In the event of a dispute between Choice One and Client arising out of or related to this Agreement, the aggrieved party will notify the other party of the dispute within a reasonable time after such dispute arises. If the parties cannot thereafter resolve the dispute, each party will nominate a senior officer of its management to meet to resolve the dispute by direct negotiation. Should such negotiation fail to resolve the dispute, the Client and Choice One agree that all disputes will be submitted to nonbinding mediation unless the parties mutually agree otherwise.

Should such negotiation or mediation fail to resolve the dispute, either party may pursue resolution by arbitration in accordance with the Construction Industry Arbitration Rules of the American Arbitration Association.

During the pendency of any dispute, the parties will continue diligently to fulfill their respective obligations hereunder.

Environmental Matters The Client warrants they have disclosed all potential hazardous materials that may be encountered on the Project. In the event unknown hazardous materials are encountered, Choice One will be entitled to additional compensation for appropriate actions to protect the health and safety of its personnel, and for additional services required to comply with applicable laws. The Client will indemnify Choice One from any claim related to hazardous materials encountered on the Project except for those events caused by negligent acts of Choice One.

Governing Law The terms of agreement will be governed by the laws of the state where the services are performed provided that nothing contained herein will be interpreted in such a manner as to render it unenforceable under the laws of the state in which the Project resides.

Hiring of Personnel Client may not directly hire any employee of Choice One. Client agrees that it shall not, directly or indirectly solicit any employee of the Engineer from accepting employment with Client, affiliate companies, or competitors of Engineer.

Information from Other Parties The Client and Choice One acknowledge that Choice One will rely on information furnished by other parties in performing its services under the Project. Choice One will not be liable for any damages that may be incurred by the Client in the use of third party information.

Insurance Choice One will maintain the following insurance and coverage limits during the period of service if such coverage is reasonably available at commercially affordable premium. Upon request, the Client will be named as an additional insured on the Commercial General Liability and Automobile Liability policies.

- Worker's Compensation: As required by applicable state statute
- Commercial General Liability: $1,000,000 per occurrence (bodily injury including death and property damage) $2,000,000 aggregate
- Automobile Liability: $1,000,000 combined single limit for bodily injury and property damage
- Professional Liability: $2,000,000 per claim and $2,000,000 aggregate

The Client will make arrangements for Builder's Risk, Protective Liability, Pollution Prevention, and other specific insurance coverage warranted for the Project in amounts appropriate to the Project value and risks. Choice One will be a named insured on those policies where Choice One may be at risk.

Attachment: NonContractualAppropriations.092820 (1634 : Non-Contractual Appropriations)

Permits and Approvals Choice One will assist the Client in preparing applications and supporting documents as identified in the scope of services for the Client to secure permits and approvals from agencies having jurisdiction over the Project. Assistance in applying for permit applications by Choice One does not guarantee approval of the permits by the jurisdictional regulatory authorities. The Client agrees to pay all application and review fees.

Reuse of Documents All documents prepared by Choice One pursuant to this Agreement are instruments of service as part of the Project. They are not intended or represented to be suitable for reuse by the Client or others on extensions of the Project or any other project. Any reuse without written verification or adaptation by Choice One for the specific purpose intended will be at the Client's risk and without liability or legal exposure to Choice One. Any verification or adaptation requested by the Client to be performed by Choice One will entitle Choice One to further compensation at rates to be agreed upon by the Client and Choice One.

Safety Choice One will be responsible solely for the safety precautions or programs of its employees and no other party. In no event will Choice One be responsible for construction methods, means, techniques or sequences of construction, which are solely the responsibility of the Contractor.

Severability Any provision of these terms later held to violate any law will be deemed void and all remaining provisions will continue in force. In such event, the Client and Choice One will work in good faith to replace an invalid provision with one that is valid with as close to the original meaning as possible.

Site Access The Client will obtain all necessary approvals for Choice One and subcontractors to access the Project site(s).

Standard of Care Services provided by Choice One will be performed with the care and skill ordinarily exercised by members of the same profession practicing under similar circumstances. The standard of care will exclusively be judged as of the time the services are rendered and not according to later standards.

Survival All provisions of these terms that allocate responsibility or liability between the Client and Choice One will survive the completion or termination of services for the Project.

Suspension of Work The Client may suspend services performed by Choice One with cause upon seven (7) calendar days documented notice. Choice One will submit an invoice for services performed up to the effective date of the work suspension and the Client will pay Choice One all outstanding invoices within fourteen (14) calendar days. Choice One will be entitled to renegotiate the Project schedule and the compensation terms for the Project.

Termination The Client or Choice One may terminate services on the Project upon seven (7) calendar days documented notice in the event of substantial failure by the other party to fulfill its obligations of the terms hereunder. Choice One will submit an invoice for services performed up to the effective date of termination and the Client will pay Choice One all outstanding invoices within fourteen (14) calendar days.

Time Bar To Legal Action All legal actions by either party against the other arising out of or in any way connected with the services to be performed hereunder will be barred and under no circumstances will any such claim be initiated by either party after three (3) years have passed from the date of Choice One's final invoice, unless Choice One's services will be terminated earlier, in which case the date of termination of this Agreement will be used.

Waiver of Rights The failure of either party to enforce any provision of these terms and conditions will not constitute a waiver of such provision nor diminish the right of either party to the remedies of such provision.

Attachment: NonContractualAppropriations.092820 (1634 : Non-Contractual Appropriations)

City Council Information Item
Regular Meeting - September 28, 2020

Submitted by: Adam Sackenheim,
Submitting Department: Public Utilities

Subject:
Appropriation for software integration services

Legislation Title:
Appropriation for software integration services

Background/Synopsis:

The City's Public Utilities Department is working to implement a City-wide automated meter reading (AMR) system. Once implemented, the advanced AMR system will eliminate the need for City staff to physically visit homes and businesses to collect water meter usage data. The AMR system will also provide real-time usage information to the Utility Billing Office, which will be beneficial for customer service support and account trouble-shooting.

To accommodate the planned AMR project, the City must integrate the new metering system and software program (by Master Meter) with the City's existing utility billing and customer account software program (MUNIS/Tyler Technologies).

MUNIS / Tyler Technologies has provided a proposal for professional services to integrate these two systems. The proposal is attached for Council review. Integration services will be completed by the end of the year, to keep the City's 'Route 113 automated metering proof of concept / demonstration project' on schedule.

A non-contractual appropriation is requested for MUNIS / Tyler Technologies in the amount of $30,800.00 for professional systems integration services as outlined above.

Financial Impact:

A non-contractual appropriation is requested for MUNIS / Tyler Technologies in the amount of $30,800.00 for professional systems integration services. This project was included in the approved 2020-2024 Capital Improvement Program (CIP), under projects 0WT17 and 0WW14 – Automatic Meter Reading. Additional funding for this project will be redirected from and split equally between project 0WT10 – Small Water Line Improvements (funding source is Water Surplus), and 0WW24 – WWTP Natural Gas Heating Components (funding source is Sewer Surplus).

Attachments:
1. AMI & third party integrations

Attachment: NonContractualAppropriations.092820 (1634 : Non-Contractual Appropriations)

AMI & Third Party Integrations

Munis – Utility Billing

TABLE OF CONTENTS

CLASS DESCRIPTION 2

AMI INTEGRATIONS 2

SCOPE 2
IMPLEMENTATION 2
ANALYSIS 3
PROJECT MANAGEMENT SERVICES 3
PROFESSIONAL SERVICES 3
IMPLEMENTATION SERVICES 4

SETUP & CONFIGURATION 5
UB MISCELLANEOUS CODES 5
UB USER-DEFINED FIELDS 7
METER INVENTORY 8
IMPORT METERS 10
METER SYNCH EXPORT 14
MASS METER REPLACEMENT 15

OTHER INTEGRATIONS 19

WORK ORDER INTEGRATIONS 19
IVR 19

Attachment: NonContractualAppropriations.092820 (1634 : Non-Contractual Appropriations)

CLASS DESCRIPTION

In this session we will explore Third Party Integrations for the Munis Utility Billing CIS product. We'll begin with an overview of AMI integrations and the tools and methodologies used to ensure a successful implementation, then transition into a discussion about other available or desired offerings.

AMI INTEGRATIONS

Advanced Metering Infrastructure (AMI) is an architecture for automated, two-way communication between a smart utility meter and a utility. AMI Integrations can vary based on the needs of your utility. The scope of the project will determine what tools in Munis will be required. Potential tools include Mass Meter Replacement, Meter Synch, and Meter Read export/import.

Scope

The scope of the AMI Implementation will determine what your Munis Utility Billing needs are:

- Is there a mass meter replacement initiative underway?
  - Will the new meters require a different measurement for billing?
  - Do read resolutions need to be considered?

- Will you be switching to a new Meter Reading application?
  - If yes, does the software require a Meter Synch?
  - Will the billing request file (meter reads) require a new format?
  - Will your meter setup require changes?

Implementation

Tyler offers the following services to assist you with your AMI project. A quote will be delivered for these services but are not billed if not used. The quote is to outline that these services may be required.

- Project Management / Analysis Services
- Implementation Services
- Professional Services
  - Custom Meter Synch and Meter Read export/import
  - Custom Mass Meter Replacement

Attachment: NonContractualAppropriations.092820 (1634 : Non-Contractual Appropriations)

Empowering people who serve the public®

Sample quote:

Other Services

Description	Quantity	Unit Price	Unit Discount	Extended Price
AMI Utility Billing Project Cost - Implementation	56	$175.00	$0.00	$9,800.00
AMI Utility Billing Project Cost - Project Management/Analysis	1	$2,800.00	$0.00	$2,800.00
AMI Utility Billing Project Cost - PS Meter Replacement	1	$9,800.00	$0.00	$9,800.00
AMI Utility Billing Project Cost - PS Meter Sync	1	$8,400.00	$0.00	$8,400.00
	TOTAL:			**$30,800.00**

Summary	**One Time Fees**	**Recurring Fees**
Total Tyler Software	$0.00	$0.00
Total Tyler Services	$30,800.00	$0.00
Total 3rd Party Hardware, Software and Services	$0.00	$0.00
Summary Total	**$30,800.00**	**$0.00**
Contract Total	**$30,800.00**	

What these services include:

ANALYSIS

At the beginning of a project, we will meet with you, your mass meter replacement vendor, and your meter reading vendor.

- Will a custom Meter Synch be required?
- Will a custom Meter Read export and import be required?
- Will the standard Mass Meter Replacement work, or will a custom format be required?
- What are the timelines for the implementation?

PROJECT MANAGEMENT SERVICES

- Coordinate meetings with vendors and staff
- Schedule knowledge transfer sessions
- Schedule testing sessions
- Submit request to Professional Services for custom layouts if required
- Provide Munis standard layouts for the following:
  - Mass Meter Replacement
  - Meter Import
  - Meter Read export/import

PROFESSIONAL SERVICES

- Provide detailed specification, cost, and delivery date for custom programming if required
  - Mass Meter Replacement
  - Meter Synch
  - Meter Read export/import

Attachment: NonContractualAppropriations.092820 (1634 : Non-Contractual Appropriations)

Empowering people who serve the public®

NOTE Professional Services timelines to deliver custom programming is 60 to 90 days from the time a request is submitted.

IMPLEMENTATION SERVICES

- Knowledge transfer
  - Required code setup and settings in Munis
  - Required meter setup in Munis
  - Meter Import
  - Mass Meter Replacement
  - Meter Synch
  - Meter Read export/import
- Testing
  - Meter Import
  - Mass Meter Replacement
  - Meter Synch
  - Meter Read export/import
  - Bill Run Processing
- Documentation of issues for Professional Services if required

Attachment: NonContractualAppropriations.092820 (1634 : Non-Contractual Appropriations)

Empowering people who serve the public®

Setup & Configuration

UB MISCELLANEOUS CODES

Munis > Property Revenues > Utility Billing > Setup > Utility Billing Miscellaneous Codes

1. Meter Size – MTSZ
   Meter Size codes are used to define the size of the meter. Most AMI systems require a specific meter size code, in decimal form, to represent the meter. For example, .75 for a 3/4" meter.

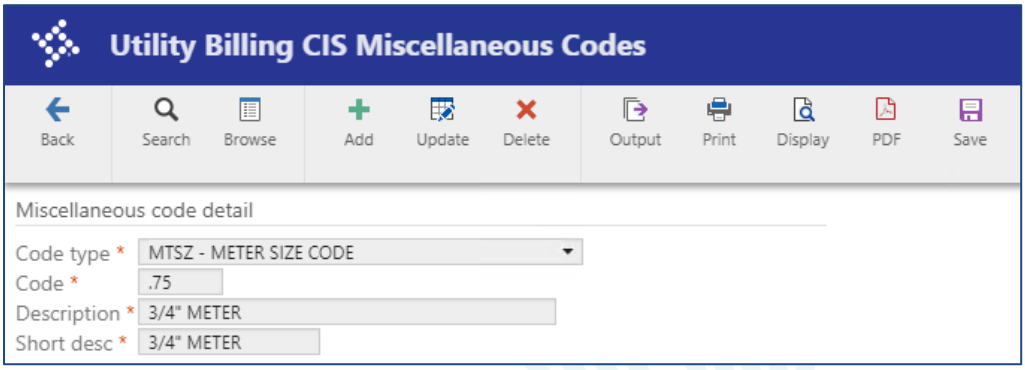

2. Meter Manufacturer – MANU
   Meter Manufacturer codes are a four-character code used to define the manufacturer of the meter. If undergoing a mass meter replacement, it may be necessary to create new manufacturer codes. Additionally, a specific code can be used to indicate which meters are sent in the meter synch file.

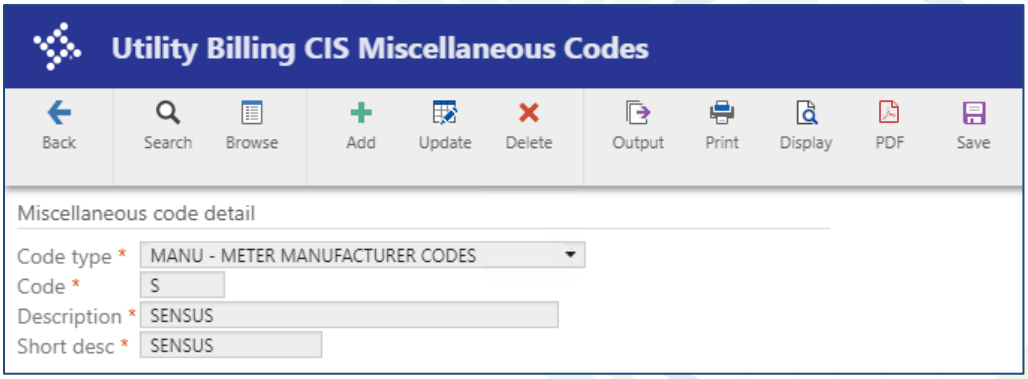

Attachment: NonContractualAppropriations.092820 (1634 : Non-Contractual Appropriations)

Empowering people who serve the public®

3. Device Code – DEV
   The Device Code is a one-character code used to identify the End Point Type for Badger Beacon integrations. This code may used to identify the type of device in other reading systems.

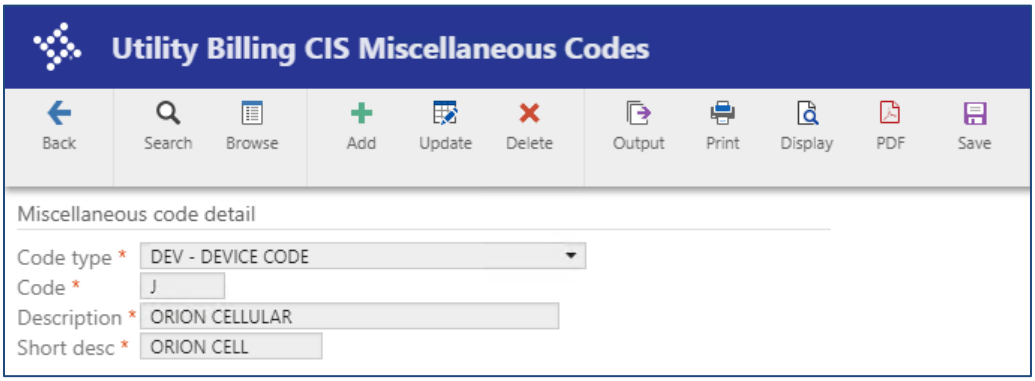

4. Test Circle Code – TCIR
   The Test Circle code is used to define the meter read resolution. The description field for this code is what is exported to the meter synch file. This code is used for Badger interfaces, and it is recommended that the code is the actual code used by Badger, and the description is the actual resolution.

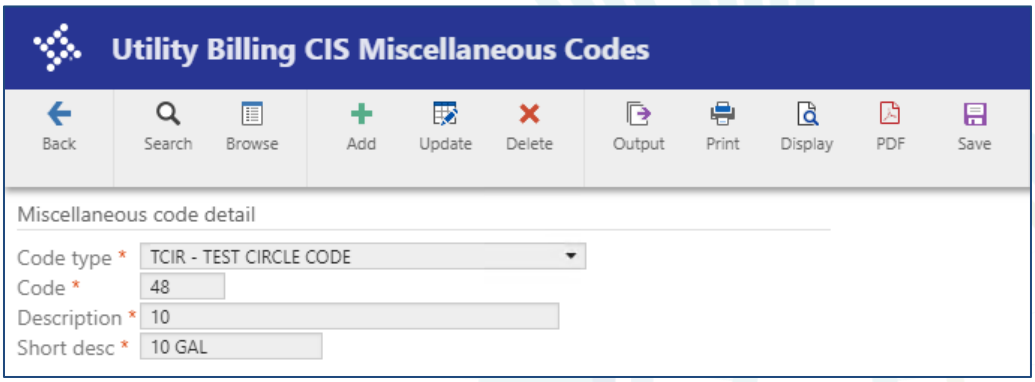

Attachment: NonContractualAppropriations.092820 (1634 : Non-Contractual Appropriations)

Empowering people who serve the public®

5. Model – MODL
   This is an optional field used to identify the model of the meter.

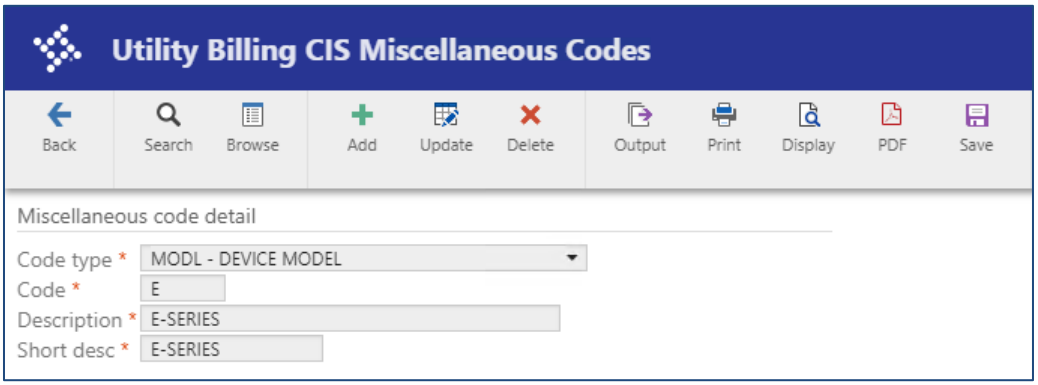

UB USER-DEFINED FIELDS

Munis > Property Revenues > Utility Billing > Setup > Utility Billing User-Defined Fields

Depending on the interface, use of user-defined fields may be required. For example, user defined fields for Register ID and MXU ID are required for Sensus interfaces. Use of user-defined fields will be identified during analysis.

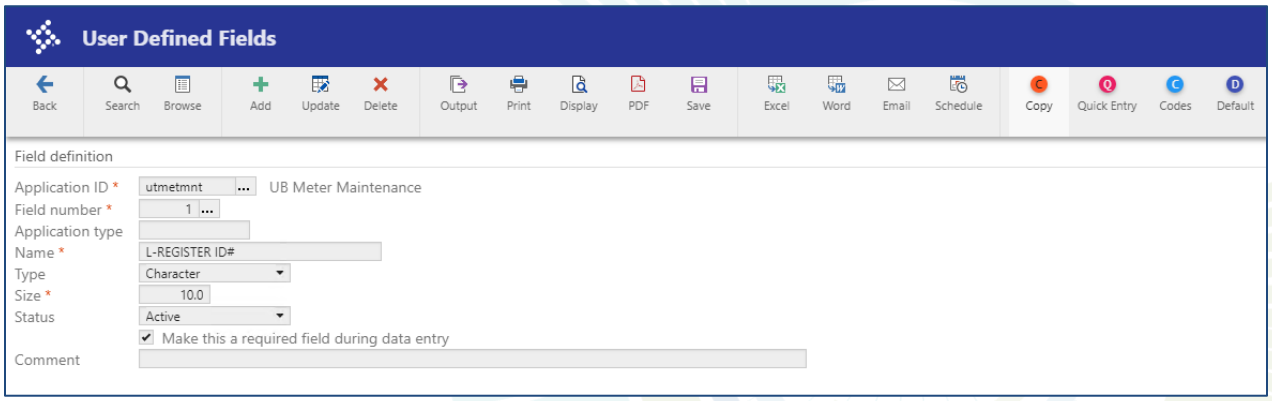

Attachment: NonContractualAppropriations.092820 (1634 : Non-Contractual Appropriations)

Empowering people who serve the public®

METER INVENTORY

Munis > Property Revenues > Utility Billing > Meter/Flat Inventory Management > Meters

Meter setup is specific to the type of meter interface being utilized. Most AMI systems require a way to identify which meter is being read. Usually there is an electronic device that is unique to the meter, such as a radio device, MXU, ERT, MTU, or Endpoint ID. The actual meter setup required for your installation will be determined by the meter reading system being used and will be identified during analysis.

Sample Badger meter:

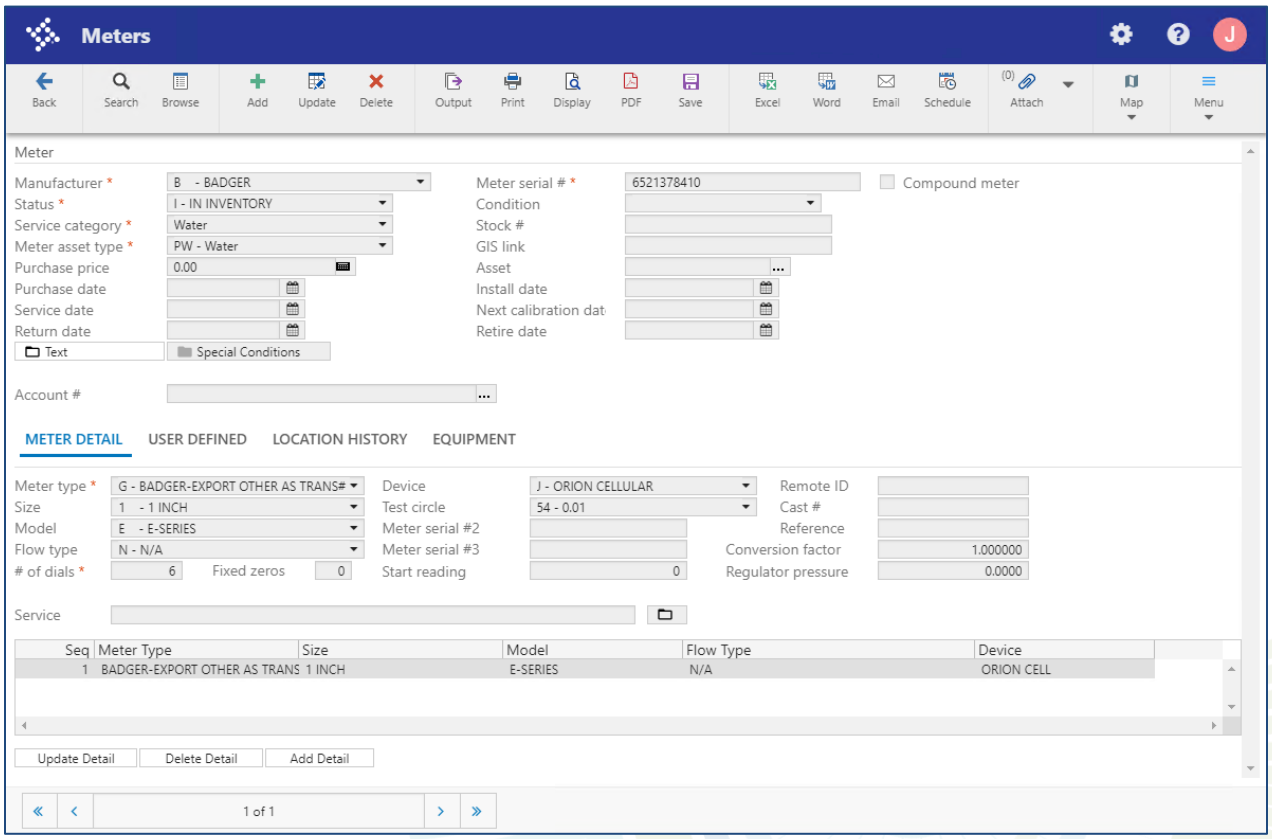

NOTE If using a Badger interface, there will be two meter records defined per service. The Read Meter is the Meter ID and the Other Meter is the Endpoint ID.

Attachment: NonContractualAppropriations.092820 (1634 : Non-Contractual Appropriations)

Empowering people who serve the public®

Sample Badger service:

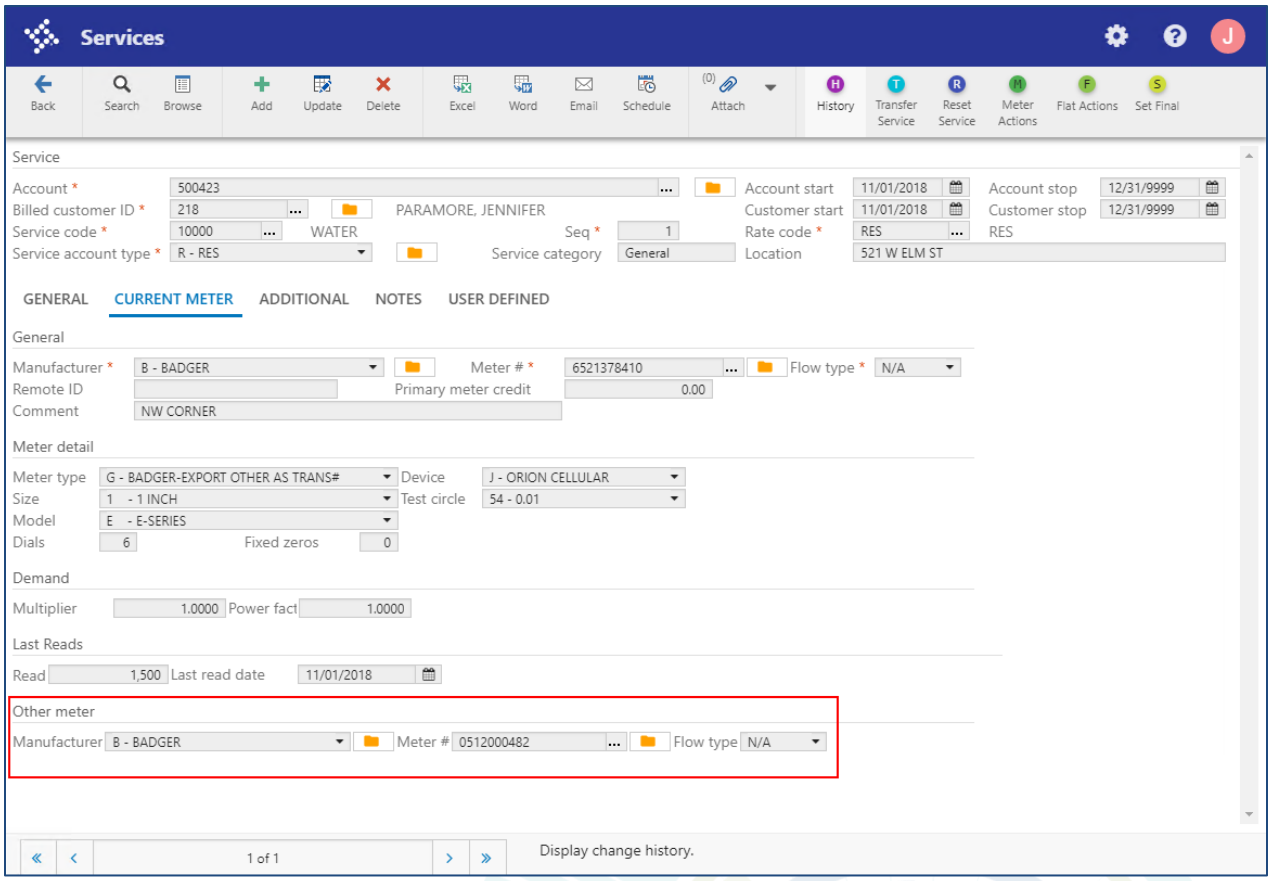

Attachment: NonContractualAppropriations.092820 (1634 : Non-Contractual Appropriations)

Empowering people who serve the public®

IMPORT METERS

Munis > Property Revenues > Utility Billing > Interface Actions > Import Meters

The Import Meters program is used to import meters into Meter Inventory. There are three standard meter import layouts available. All meter import files must be a .txt file.

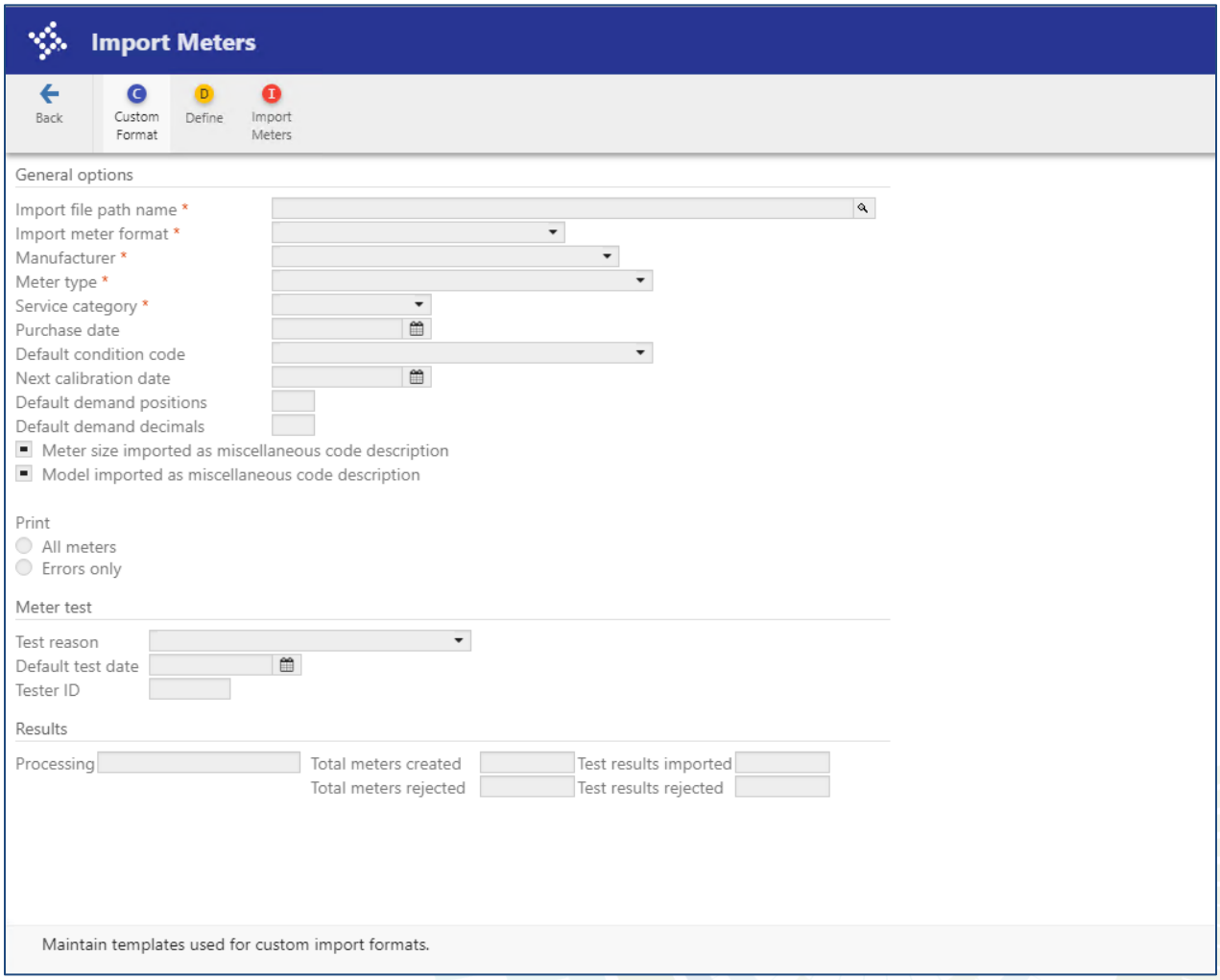

NOTE The ability to develop a custom import format is available by selecting Custom Format from the Import Meters program.

Attachment: NonContractualAppropriations.092820 (1634 : Non-Contractual Appropriations)

Empowering people who serve the public®

STANDARD (S) File Layout:

Field Name	Fields	Description
Meter/Electronic Number	1-15	Character Left Justified
Model	16-25	Character Left Justified
Number of Dials	26-26	Required (number 1-9)
Number of Fixed Zeros	27-27	Number (default to ZERO)
Device Code	28-28	Character
Test Circle	29-30	Character
Meter Size	31-40	Character
Blank	41-80	SPACES
Flow Type	81-81	Character
Reference	82-85	Character

STANDARD (N) File Layout:

Field Name	Fields	Description
Serial Number	1-15	Manufacturer's meter serial number - Required
Flow Type	16-16	If left blank, meter not a compound meter.
		Valid compound types "H", "M", "L".
Model	17-26	Misc code or description matching misc code.
Number of Dials	27-27	Required
Number of Fixed Zeros	28-28	Import will default 0 if this field is blank.
		Must be less than the number of dials.
Device Code	29-29	
Test Circle	30-31	
Meter Size	32-41	Misc code or description matching misc code.
Manufacturer	42-45	Import will use the manufacturer name from the define screen if this field is blank.
Additional Meter #2	46-60	
Additional Meter #3	61-75	
Remote ID	76-90	Remote ID/ERT
Cast ID	91-105	
Reference	106-120	
Demand Positions	121-121	
Demand Decimals	122-122	
Conversion Factor	123-132	
Regulator Pressure	133-143	

Attachment: NonContractualAppropriations.092820 (1634 : Non-Contractual Appropriations)

Empowering people who serve the public®

Standard K	144-148	
Register Ratio	149-168	
Amps	169-179	
Volts	180-190	
Phase	191-194	Misc Code
Wire	195-198	Misc Code

STANDARD2 WITH TEST RESULTS (T) File Layout:

Field Name	Fields	Description
Serial Number	1-15	Manufacturer's meter serial number - Required
Flow Type	16-16	If left blank, meter not a compound meter.
		Valid compound types "H", "M", "L".
Model	17-26	Misc code or description matching misc code.
Number of Dials	27-27	Required
Number of Fixed Zeros	28-28	Import will default 0 if this field is blank.
		Must be less than the number of dials.
Device Code	29-29	
Test Circle	30-31	
Meter Size	32-41	Misc code or description matching misc code.
Manufacturer	42-45	Import will use the manufacturer name from the define screen if this field is blank.
Additional Meter #2	46-60	
Additional Meter #3	61-75	
Remote ID	76-90	Remote ID/ERT
Cast ID	91-105	
Reference	106-120	
Demand Positions	121-121	
Demand Decimals	122-122	
Conversion Factor	123-132	
Regulator Pressure	133-143	
Standard K	144-148	
Register Ratio	149-168	
Amps	169-179	
Volts	180-190	
Phase	191-194	Misc Code
Wire	195-198	Misc Code

Attachment: NonContractualAppropriations.092820 (1634 : Non-Contractual Appropriations)

Empowering people who serve the public®

Test Data		
Service Type	199-199	"I" - Initial, "R" - Repair, "C" - Calibration
Test Date	200-209	Import will use the test date from the define screen if this field is blank.
Prior Read	210-218	
Current Read	219-227	
High % as found	228-232	
Med % as found	233-237	
Low % as found	238-242	
High % as left	243-247	
Med % as left	248-252	
Low % as left	253-257	
Standard K full load	258-262	
Standard K light load	263-267	
Revolutions full load	268-272	
Revolutions light load	273-277	
Power factor	278-287	
Unused	288-323	

Attachment: NonContractualAppropriations.092820 (1634 : Non-Contractual Appropriations)

Empowering people who serve the public®

METER SYNCH EXPORT

Munis > Property Revenues > Utility Billing > Interface Actions > Meter Sync Export

The Meter Synch Export program exports meter and account data for a meter reading system. There are several different file layouts available dependent on the interface being utilized. For example, Sensus Logic, Mueller, Badger Beacon, and Itron MDI. Additionally, a custom format can be defined using the Custom Template option.

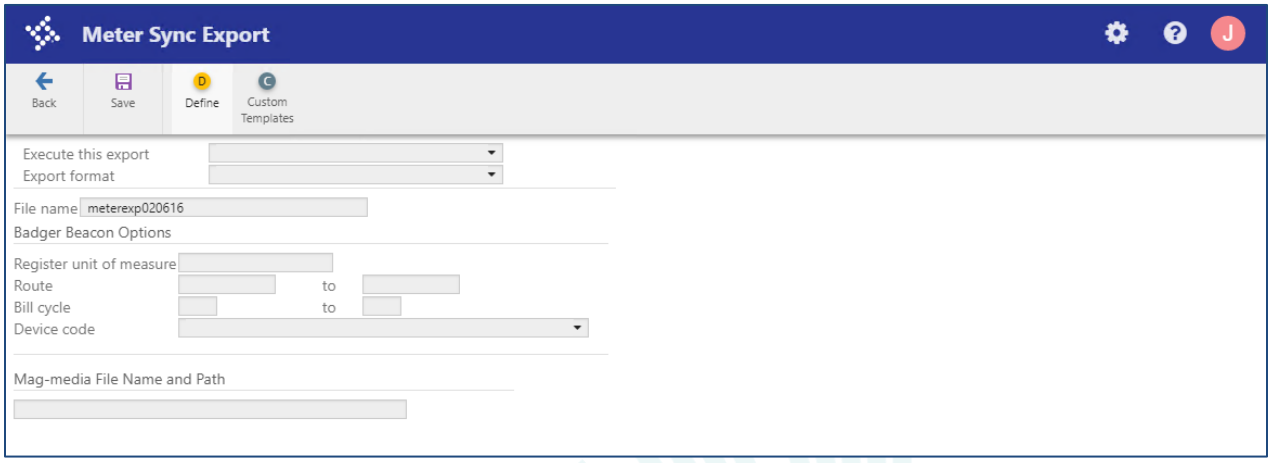

NOTE The custom template option selects all meters whether they are for the AMI system or not.

Attachment: NonContractualAppropriations.092820 (1634 : Non-Contractual Appropriations)

Empowering people who serve the public®

MASS METER REPLACEMENT

Munis > Property Revenues > Utility Billing > Meter/Flat Inventory Management > Meter Actions > Mass Meter Replacement

This program is used to mass process meter replacements performed by a vendor in the field. This process will perform the Replace Meter action for all identified services. There are two standard mass meter replacement layouts available.

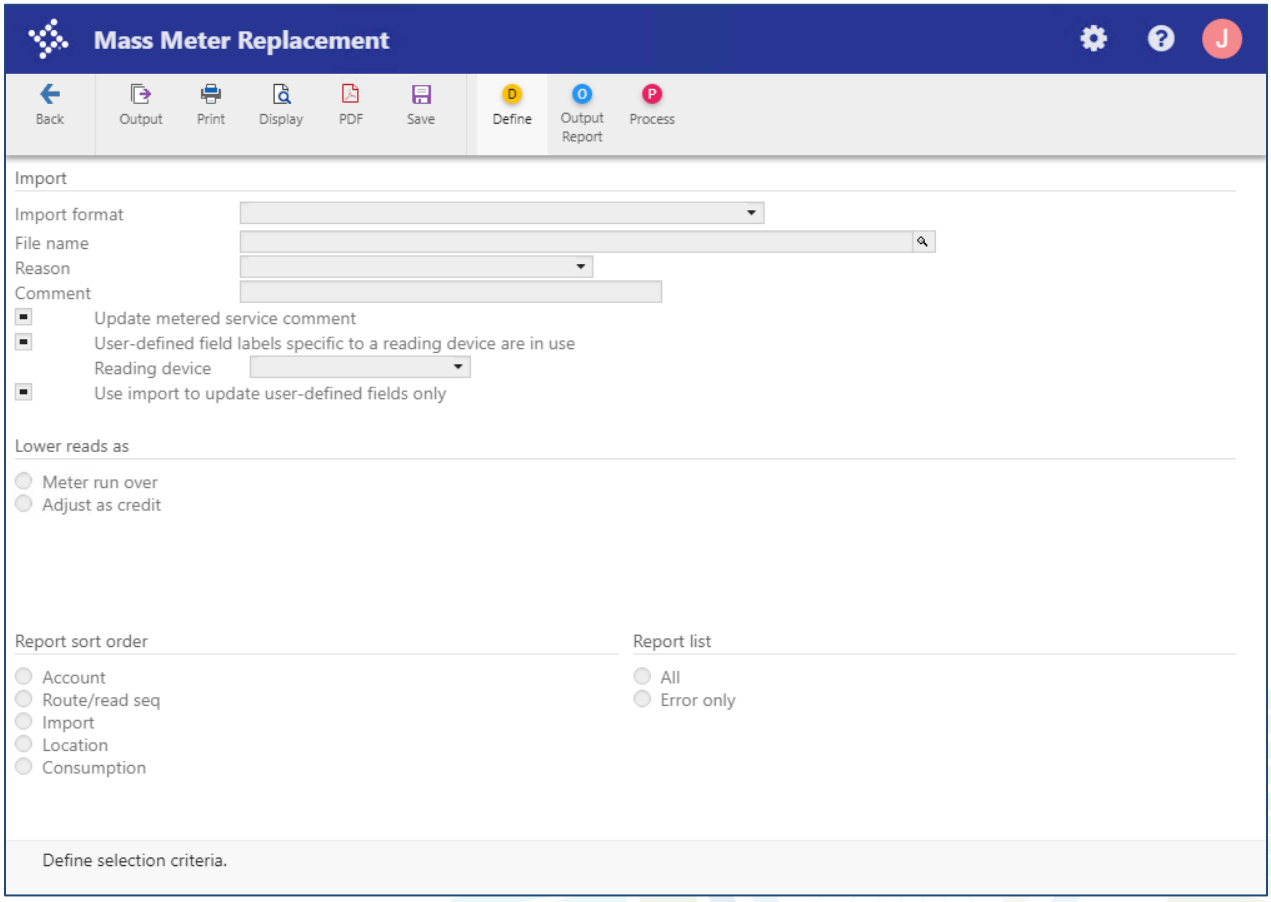

NOTE If your interface requires use of 'Other Meter' to be either inserted and/or updated, a custom Mass Meter Replacement will be required.

Attachment: NonContractualAppropriations.092820 (1634 : Non-Contractual Appropriations)

Empowering people who serve the public®

MASS METER REPLACEMENT – STANDARD File Layout:

Field Name	Fields	Required	Description
Utility Account Number	1-30	Required	
Customer Number	31-39	Required	
Service Code	40-45	Required	
Service Sequence	46-48	Required	Right justified zero filled
Old Meter Manufacturer Code	49-52	Required	**
Old Meter Serial Number	53-67	Required	
Old Meter Status	68-68	Required	
Old Meter Ending Read	69-77	Required	
Old Meter Last Read Date	78-85	Required	MMDDYYYY
Old Meter Reason Code	86-87	Required	**
Old Meter Comment	88-127	Required	
New Meter Manufacturer Code	128-131	Required	**
New Meter Serial Number	132-146	Required	
New Meter Device	147-147	Optional	**
New Meter Test Circle	148-149	Optional	**
New Meter Type	150-150	Optional	* **
New Meter Size	151-154	Optional	* **
New Meter Flow Type	155-158	Optional	* **
New Meter Number of Dials	159-159	Optional	*
New Meter Number of Fixed Zeros	160-160	Optional	*
New Meter Remote ID	161-175	Optional	
New Meter Starting Read	176-184	Required	
New Meter Install date	185-192	Required	MMDDYYYY
New Meter Serial #2	193-207	Optional	
New Meter Serial #3	208-222	Optional	
New Meter Cast ID	223-237	Optional	
New Meter Model	238-241	Optional	
New Meter Service Category	242-242	Optional	" ", "E", "G", "O", or "W"
New Meter Condition	243-246	Optional	**
New Meter Reference	247-261	Optional	
New Meter Service Comment	262-301	Optional	
UDF 1 - L-REGISTER ID#	302-311	Optional	Char(10)
UDF 2 - L-MXU ID#	312-326	Optional	Char(15)
UDF 3 - L-MXU TYPE	327-327	Optional	Char(1)
UDF 4 - L-PORT CHANNEL	328-328	Optional	Char(1)

Attachment: NonContractualAppropriations.092820 (1634 : Non-Contractual Appropriations)

Empowering people who serve the public®

UDF 5 - L-PORT NUMBER	329-329	Optional	Char(1)
UDF 6 - L-PORT TYPE	330-330	Optional	Char(1)
UDF 7 - L-GIS LATITUDE	331-341	Optional	Char(11)
UDF 8 - L-GIS LONGITUDE	342-352	Optional	Char(11)

MASS METER REPLACEMENT – STANDARD +UDF File Layout:

Field Name	Fields	Required	Description
Utility Account Number	1-30	Required	
Customer Number	31-39	Required	
Service Code	40-45	Required	
Service Sequence	46-48	Required	Right justified zero filled
Old Meter Manufacturer Code	49-52	Required	**
Old Meter SerialNumber	53-67	Required	
Old Meter Status	68-68	Required	
Old Meter Ending Read	69-77	Required	
Old Meter Last Read Date	78-85	Required	MMDDYYYY
Old Meter Reason Code	86-87	Required	**
Old Meter Comment	88-127	Required	
New Meter Manufacturer Code	128-131	Required	**
New Meter Serial Number	132-146	Required	
New Meter Device	147-147	Optional	**
New Meter Test Circle	148-149	Optional	**
New Meter Type	150-150	Optional	* **
New Meter Size	151-154	Optional	* **
New Meter Flow Type	155-158	Optional	* **
New Meter Number of Dials	159-159	Optional	*
New Meter Number of Fixed Zeros	160-160	Optional	*
New Meter Remote ID	161-175	Optional	
New Meter Starting Read	176-184	Required	
New Meter Install date	185-192	Required	MMDDYYYY
New Meter Serial #2	193-207	Optional	
New Meter Serial #3	208-222	Optional	
New Meter Cast ID	223-237	Optional	
New Meter Model	238-241	Optional	
New Meter Service Category	242-242	Optional	" ", "E", "G", "O", or "W"
New Meter Condition	243-246	Optional	**
New Meter Reference	247-261	Optional	

Attachment: NonContractualAppropriations.092820 (1634 : Non-Contractual Appropriations)

Empowering people who serve the public®

New Meter Service Comment	262-301	Optional	
Meter Inventory user defined 1 or label 'L-REGISTER ID#'	302-311	Optional	
Meter Inventory user defined 2 or label 'L-MXU ID#'	312-326	Optional	
Meter Inventory user defined 3 or label 'L-MXU TYPE'	327-327	Optional	
Meter Inventory user defined 4 or label 'L-PORT CHANNEL'	328-328	Optional	
Meter Inventory user defined 5 or label 'L-PORT NUMBER'	329-329	Optional	
Meter Inventory user defined 6 or label 'L-PORT TYPE'	330-330	Optional	
Meter Inventory user defined 7 or label 'L-GIS LATITUDE'	331-341	Optional	
Meter Inventory user defined 8 or label 'L-GIS LONGITUDE'	342-352	Optional	

Attachment: NonContractualAppropriations.092820 (1634 : Non-Contractual Appropriations)

Empowering people who serve the public®

OTHER INTEGRATIONS

Work Order Integrations

Utility Billing currently offers third party Work Order Integrations with Lucity and Cityworks.

These interfaces can be real time, allowing for work orders to be created in Munis and for associated work to be completed in the external system. Once work has been completed in the external system and the work record has been closed, the linked Munis UB work order record will get updated with readings and other applicable information. If additional actions are required, such as meter actions, the service order will be updated to a status of 'T-THIRD PARTY COMPLETE'. These records need to be completed in Munis to finalize the resulting meter action.

NOTE Cityworks requires a third party to develop a pass-through integration to Cityworks.

IVR

The Web Service API is a Tyler offering that allows real-time access to a set of services to facilitate data access into the Munis UB application. Third party IVR vendors will use the Web Service API to make account inquiries, update customer information, retrieve consumption history, pay bills, and more.

Below is a sampling of the type of information available.

Features:
- Obtain Account/Bill History
- Obtain Past Due Amounts
- Obtain Payment History
- Obtain Meter Read Info
- Obtain Consumption Info
- Obtain UB Account Services
- Obtain UB Account, Customer, Service, Meter Info
- Submit a Meter Reading
- Delinquent Account Listings
- Apply Payment
- Delivery Methods
- Obtain / Set EFT
- Obtain Bank Codes
- Obtain/Set Notes
- Obtain/Set Contact Info

Attachment: NonContractualAppropriations.092820 (1634 : Non-Contractual Appropriations)

Empowering people who serve the public®

City Council Information Item
Regular Meeting - September 28, 2020

Submitted by: Adam Sackenheim,
Submitting Department: Public Utilities

Subject:
Security camera

Legislation Title:
Security camera for Wastewater Plant

Background/Synopsis:

The Public Utilities campus is monitored by a number of security and surveillance cameras. Several cameras are also used to monitor treatment processes – such as the sludge dewatering process at the Sewer Plant. Operators at the Water Plant and Sewer Plant monitor the camera feeds in real time.

A new security camera is needed for the Wastewater Treatment Plant to replace an existing unit that is no longer operational and out of warranty.

A quote for the camera, including installation, is attached for Council review.

Financial Impact:

An appropriation in the amount of $2,084.00 is being requested for a new security camera at the Wastewater Treatment Plant.

Funding for this project is included in the approved 2020-2024 Capital Improvement Program (CIP), under 10WW05 – 'Instrumentation Replacement Program'. Funding source is the Sewer Replacement and Improvement Fund (604).

Attachments:
1. Quote_City of Fairfield_323 (3)

Attachment: NonContractualAppropriations.092820 (1634 : Non-Contractual Appropriations)

Quote

Quote Number: 323
Quote Name: Replace One Camera at Waste Water

Payment Terms: Due upon receipt
Expiration Date: 10/02/2020

Quote Prepared For

Lance Kennedy
City of Fairfield
701 Wessel Dr.
Fairfield, OH 45014
Phone:(513) 896-8109
lkennedy@fairfield-city.org

Quote Prepared By

Tamrah Scott
Digital Visions
2951 E. Kemper Rd.
Cincinnati, OH 45241
United States
Phone:513-671-3660

tscott@digitalvisionsllc.com

Item#	Quantity	Item	Unit Price	Extended Price
One-Time Items				
1)	1	AXIS P5654-E 60HZ PTZ camera with 77° field of view, continues 360° pan for both indoor and outdoor with 21x optical zoom. HDTV 720p @ 60fps (1280x720) in H.264/265, Motion JPEG, Axis Zipstream, Lighfinder 2 and Focus Recall, WDR, Day & Night, IP66, IK10 and NEMA 4X classification. Advanced Gatekeeper, full-size SD-card slot, smoked and clear dome. Mounting brackets and Midspan are not included.	$1,599.00	$1,599.00
2)	1	Technician Installation of one camera at Waste Water.	$380.00	$380.00
3)	1	Engineer Configuration of one camera into Genetec.	$105.00	$105.00
			One-Time Total	**$2,084.00**
			Subtotal	**$2,084.00**
			Total Taxes	**$0.00**
			Total	**$2,084.00**

Authorizing Signature _____

Date _____

Interest Charges on Past Due Accounts and Collection Costs Overdue amounts shall be subject to a monthly finance charge. In addition, customer shall reimburse all costs and expenses for attorney's fees incurred in collecting any amounts past due. Additional training or Professional Services can be provided at our standard rates.

Attachment: NonContractualAppropriations.092820 (1634 : Non-Contractual Appropriations)

ORDINANCE NO. _____

ORDINANCE TO AMEND ORDINANCE NO. 119-19 ENTITLED "AN ORDINANCE TO MAKE ESTIMATED APPROPRIATIONS FOR THE EXPENSES AND OTHER EXPENDITURES OF THE CITY OF FAIRFIELD, OHIO, DURING A PERIOD BEGINNING JANUARY 1, 2020, AND ENDING DECEMBER 31, 2020."

BE IT ORDAINED by the Council of the City of Fairfield, Ohio, that:

Section 1. Ordinance No. 119-19, the 2020 Appropriation Ordinance, is hereby amended in the following respects:

From:	**Unappropriated Water Surplus Fund**	**$50,760**
To:	60516023-233300 Engineering Services *(Engineering Services for John Gray Rd Water Main Replacement 0WT10)*	$28,360
To:	60516025-252000 Improvements Other Than Building *(Asphalt / Concrete Replacement 0WT14 ($7,000); Automatic Meter Reading (AMR) 0WT17 ($15,400))*	$22,400
From:	**Unappropriated Sewer Replacement & Improvement Fund**	**$17,484**
To:	62316025-252000 Improvements Other Than Building *(Automatic Meter Reading (AMR) 0WW14 ($15,400); Security Camera Upgrade - Wastewater Plant 0WW05 ($2,084))*	$17,484

Section 2. This Ordinance shall take effect at the earliest period allowed by law.

Passed _____ _____
Mayor's Approval

Posted _____

First Reading _____ Rules Suspended _____

Second Reading _____

Third Reading _____

Attachment: NonContractual 9-28-Ord (1634 : Non-Contractual Appropriations)

ATTEST:

_____

Clerk of Council

This is to certify that this Ordinance has been duly published by posting and summary publication as provided by Charter.

_____

Clerk of Council

Active Clients\City of Fairfield\Ordinances\2020\NonContractual 9-28-Ord

Attachment: NonContractual 9-28-Ord (1634 : Non-Contractual Appropriations)